YK600XGL

Standard type: Medium type

- Arm length 600mm
- Maximum payload 5kg

Ordering method

YK600XGL - 150					RCX340-4							
Model	Z axis stroke	Tool flange	Hollow shaft	Cable	Controller / Number of controllable axes	Safety standard	Option A (OP.A)	Option B (OP.B)	Option C (OP.C)	Option D (OP.D)	Option E (OP.E)	Absolute battery
	150: 150mm	No entry: None F: With tool flange	No entry: None S: With hollow shaft	3L: 3.5m 5L: 5m 10L: 10m								

Specify various controller setting items. RCX340 ▶ P.502

RCX240S						BB
Controller	CE Marking	Expansion I/O	Network option	iVY System	Gripper	Battery

Specify various controller setting items. RCX240/RCX240S ▶ P.489

Specifications

			X-axis	Y-axis	Z-axis	R-axis
Axis specifications	Arm length (mm)		350	250	150	-
	Rotation angle (°)		+/-140	+/-144	-	+/-360
AC servo motor output (W)			200	150	50	100
Deceleration mechanism	Speed reducer		Harmonic drive	Harmonic drive	Ball screw	Harmonic drive
	Transmission method	Motor to speed reducer	Direct-coupled			
		Speed reducer to output	Direct-coupled			
Repeatability Note 1 (XYZ: mm) (R: °)			+/-0.01		+/-0.01	+/-0.004
Maximum speed (XYZ: m/sec) (R: °/sec)			4.9		1.1	1020
Maximum payload (kg)			5 (Standard specification), 4 (Option specifications Note 4)			
Standard cycle time: with 2kg payload Note 2 (sec)			0.63			
R-axis tolerable moment of inertia Note 3 (kgm^2)			0.05kgm^2 (0.5$kgfcms^2$)			
User wiring (sq × wires)			0.2 × 10			
User tubing (Outer diameter)			ϕ4 × 3			
Travel limit			1.Soft limit 2.Mechanical stopper (X,Y,Z axis)			
Robot cable length (m)			Standard: 3.5 Option: 5,10			
Weight (kg)			22			

Note 1. This is the value at a constant ambient temperature. (X,Y axes)
Note 2. When reciprocating 300mm in horizontal and 25mm in vertical directions.
Note 3. There are limits to acceleration coefficient settings. See P.530.
Note 4. Maximum payload of option specifications (with tool flange attached or with user wiring and tubing routed through spline shaft) is 4kg.

Controller

Controller	Power capacity (VA)	Operation method
RCX340 RCX240S	1000	Programming / I/O point trace / Remote command / Operation using RS-232C communication

Note. "Harmonic" and "Harmonic drive" are the registered trademarks of Harmonic Drive Systems Inc.
Note. The movement range can be limited by changing the positions of X and Y axis mechanical stoppers. (The movement range is set to the maximum at the time of shipment.) See our robot manuals (installation manuals) for detailed information.
Note. To set the standard coordinates with high accuracy, use a standard coordinate setting jig (option). Refer to the user's manual (installation manual) for more details.

Our robot manuals (installation manuals) can be downloaded from our website at the address below:
http://global.yamaha-motor.com/business/robot/

YK600XGL

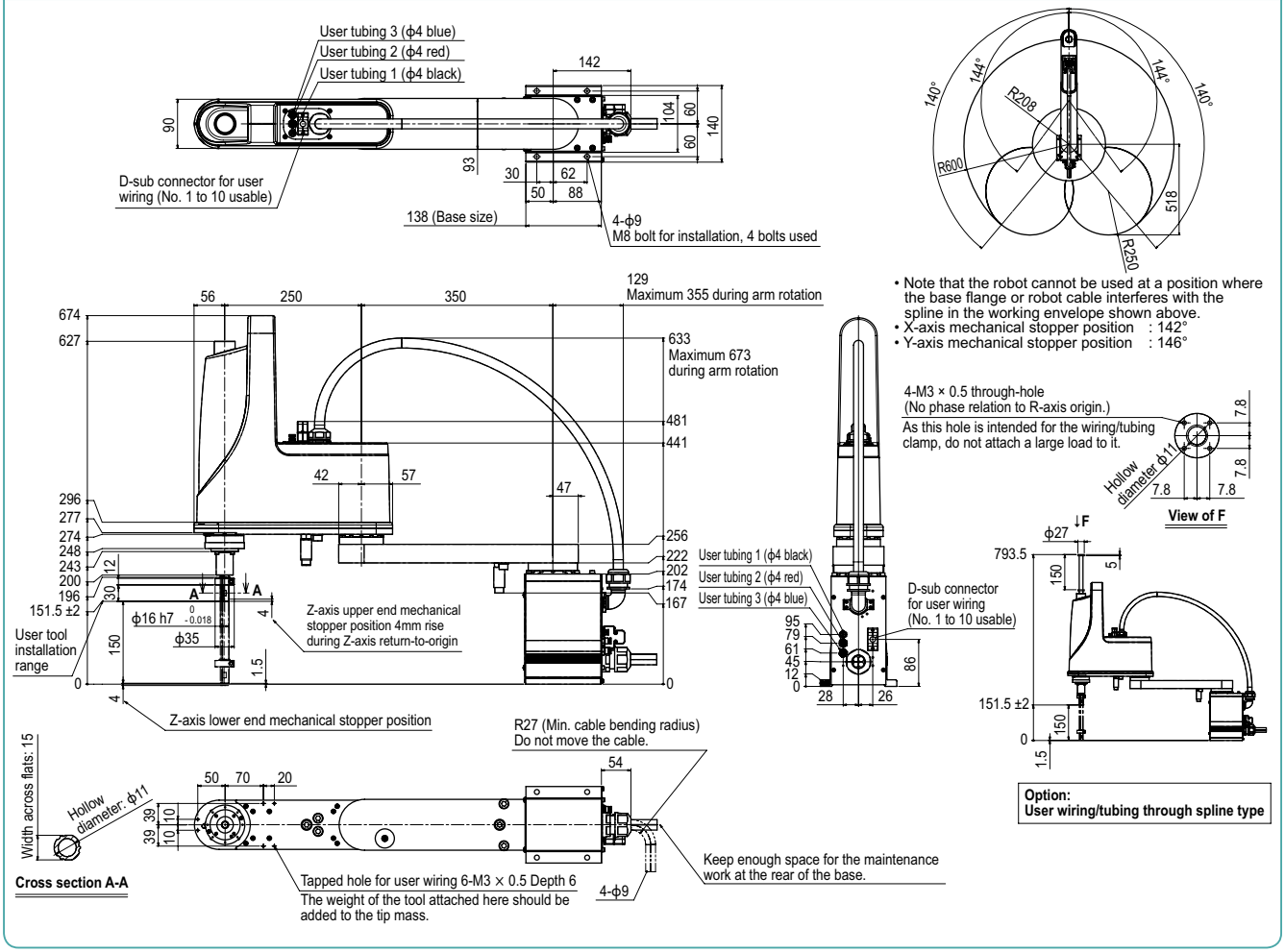

YK600XGL

YK600XGL Tool flange mount type

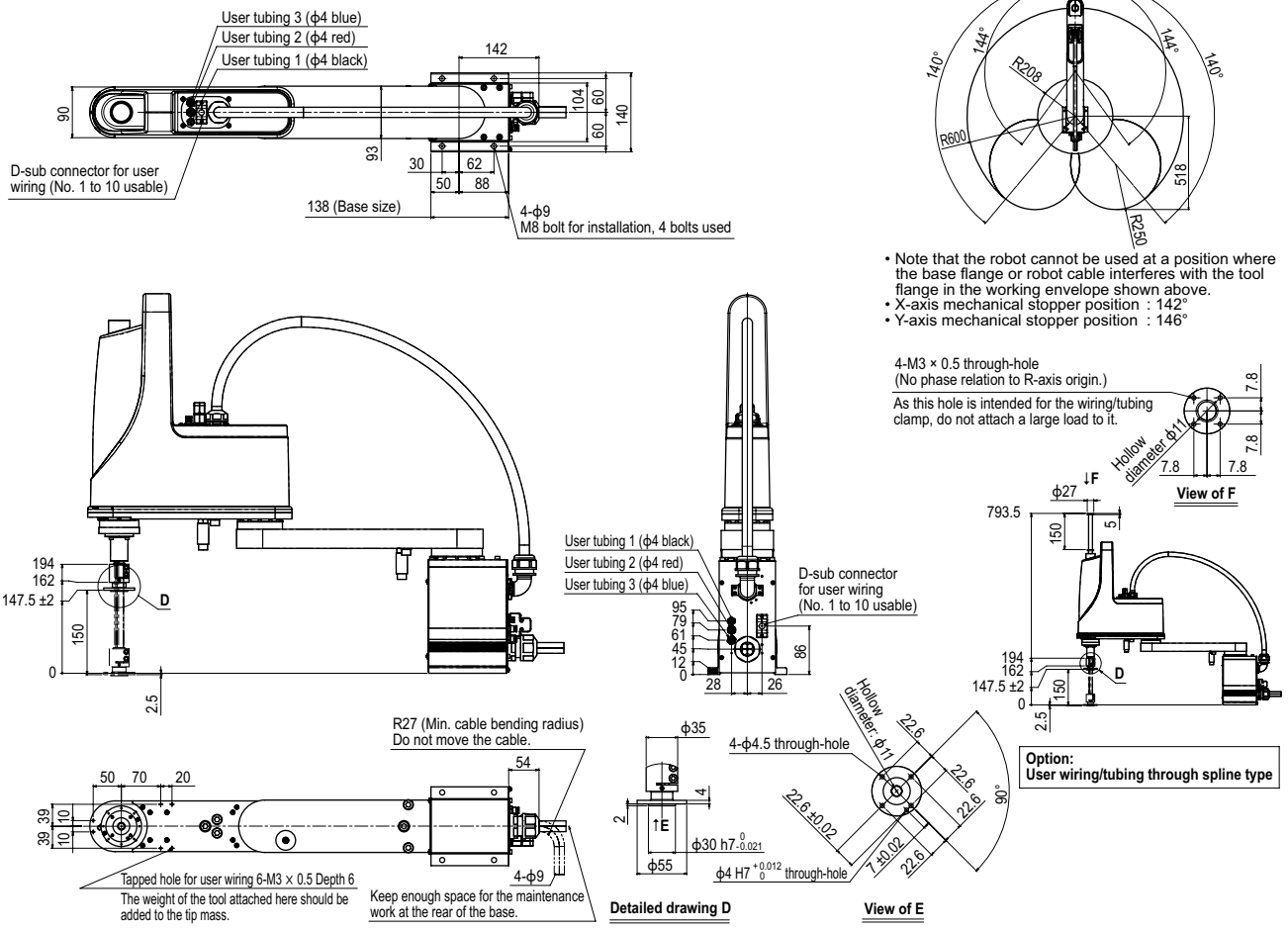

- Note that the robot cannot be used at a position where the base flange or robot cable interferes with the tool flange in the working envelope shown above.
- X-axis mechanical stopper position : 142°
- Y-axis mechanical stopper position : 146°