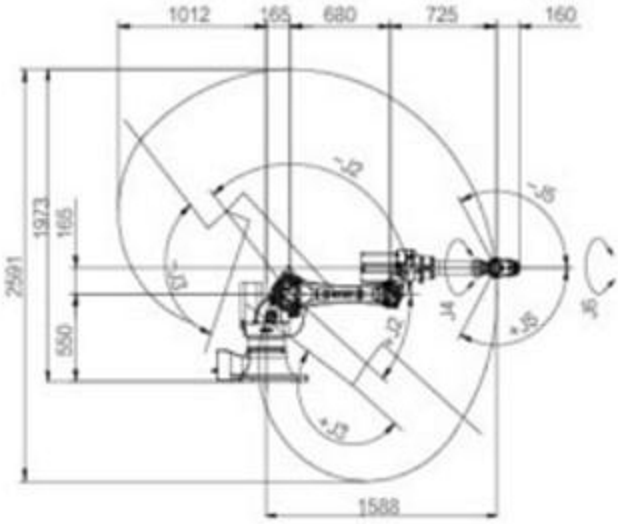

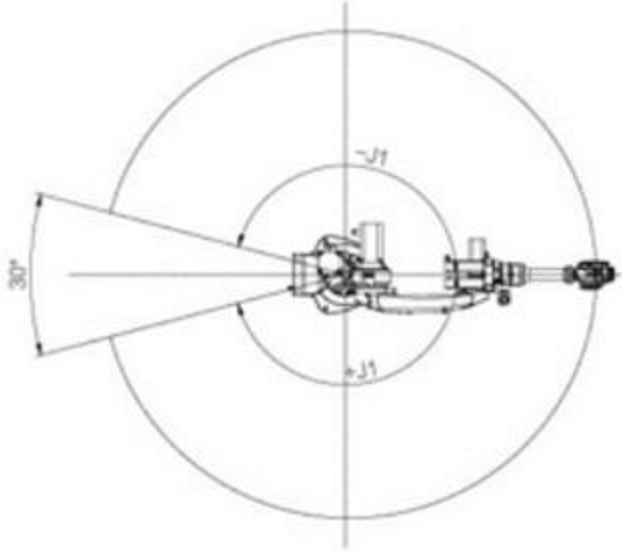

Technical Specifications

Model		SR20
Max Working Radius		1588mm
Number of Axis		6
Max Speed	J1	150° /s
	J2	120° /s
	J3	120° /s
	J4	360° /s
	J5	300° /s
	J6	450° /s
Max Operation Area	J1	±165°
	J2	+40° --155°
	J3	+165° --100°
	J4	±360°
	J5	±120°
	J6	±360°
The Max Moment Allowable Torque	J5	186Nm
	J6	98Nm
Weight		240kgs
Position Repeatability		±0.05mm
Working Temperature		0-45℃