OTC DAIHEN EUROPE

Roboter – Technische Daten
Manipulator Specifications

FD-V6

			FD-V6
Model			
Kinematic			Vertical artic. type
No. of Axes			6
P-Point (Working Range)			R 2,006 mm
Maximum Payload Capacity			6 kg
Positional Repeatability(*1)			± 0.08 mm
Driving Method			AC Servo Motor
Working Range	Arm	J1 (Rotation)	± 170°
		J2 (Vertical)	-155° ≈ +100°
		J7	
	Wrist	J3 (Rotation)	-170° ≈ +260°
		J4 (Rotation)	± 180°
		J5 (Bending)	-50° ≈ +230°
		J6 (Rotation)	± 360°
Maximum Speed	Arm	J1 (Rotation)	195°/s
		J2 (Vertical)	200°/s
		J7	
	Wrist	J3 (Rotation)	200°/s
		J4 (Rotation)	420°/s
		J5 (Bending)	420°/s
		J6 (Rotation)	620°/s
Maximum Payload	Allowable Moment	J1 (Rotation)	11.8 Nm
		J2 (Vertical)	9.8 Nm
		J3 (Rotation)	5.9 Nm
		J4 (Rotation)	0.30 kg/m^2
		J5 (Bending)	0.25 kg/m^2
		J6 (Rotation)	0.06 kg/m^2
Ambient Temp./Humidity			0 ≈ 45°, 20 ≈ 80%
Mass (weight)			280 kg
Upper arm max. Carrying capacity(*2)			20 kg (Note 2)
Origin Return			Note 3
Installation Position			F, W, C

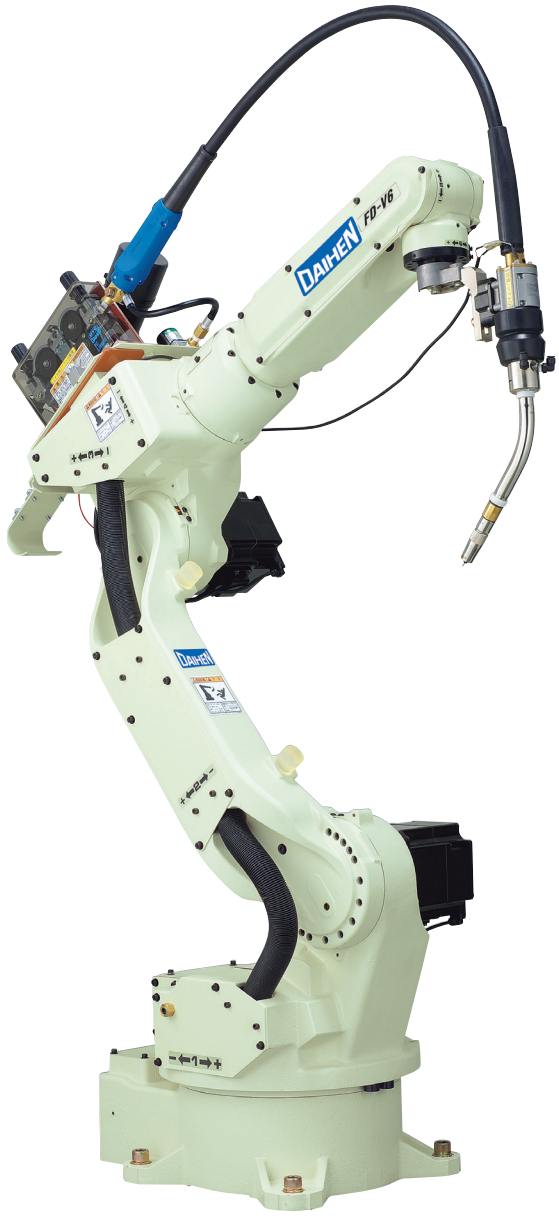

Note 1: Measured value obtained after sufficient repetition of automatic operation for stabilizing conditions.
Note 2: When the output flange of the wrist axis is loaded with maximum payload capacity.
Note 3: Positional data protected by battery-backed storage inside the manipulator.
F = Floor W = Wall C = Ceilling

OTC DAIHEN EUROPE

Roboter – Technische Daten
Manipulator Specifications

FD-V6

			FD-V6
Model			
Kinematic			Vertical artic. type
No. of Axes			6
P-Point (Working Range)			R 2,006 mm
Maximum Payload Capacity			6 kg
Positional Repeatability(*1)			± 0.08 mm
Driving Method			AC Servo Motor
Working Range	Arm	J1 (Rotation)	± 170°
		J2 (Vertical)	-155° ≈ +100°
		J7	
		J3 (Rotation)	-170° ≈ +260°
	Wrist	J4 (Rotation)	± 180°
		J5 (Bending)	-50° ≈ +230°
		J6 (Rotation)	± 360°
Maximum Speed	Arm	J1 (Rotation)	195°/s
		J2 (Vertical)	200°/s
		J7	
		J3 (Rotation)	200°/s
	Wrist	J4 (Rotation)	420°/s
		J5 (Bending)	420°/s
		J6 (Rotation)	620°/s
Maximum Payload	Allowable Moment	J1 (Rotation)	11.8 Nm
		J2 (Vertical)	9.8 Nm
		J3 (Rotation)	5.9 Nm
		J4 (Rotation)	0.30 kg/m²
		J5 (Bending)	0.25 kg/m²
		J6 (Rotation)	0.06 kg/m²
Ambient Temp./Humidity			0 ≈ 45°, 20 ≈ 80%
Mass (weight)			280 kg
Upper arm max. Carrying capacity(*2)			20 kg (Note 2)
Origin Return			Note 3
Installation Position			F, W, C

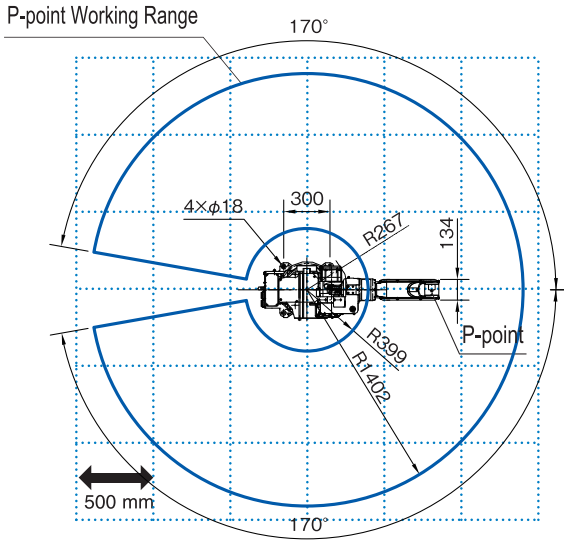

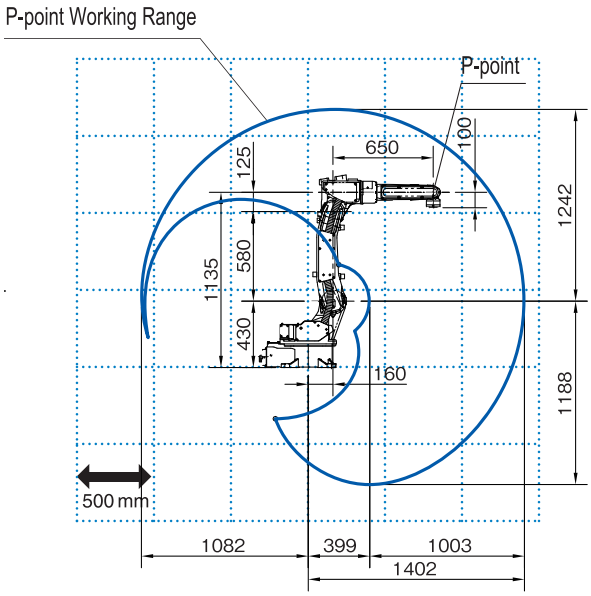

Note 1: Measured value obtained after sufficient repetition of automatic operation for stabilizing conditions.
Note 2: When the output flange of the wrist axis is loaded with maximum payload capacity.
Note 3: Positional data protected by battery-backed storage inside the manipulator.
F = Floor W = Wall C = Ceilling