YASKAWA

PL80

HIGH-PERFORMANCE PALLETIZING ROBOT

KEY BENEFITS

Versatile, high-speed robot for palletizing applications

Highly reliable

Small footprint with large working range

SPECIFICATIONS

80 kg payload

2,061 mm horizontal reach

3,291 mm vertical reach

0.03 mm repeatability

APPLICATION

Case Palletizing

Bag Palletizing

De-Palletizing

Layer Picking

Layer Forming

CONTROLLER

YRC1000

- Increase productivity with the highly efficient 5-axis PL80 robot.
- Ideal for a variety of palletizing applications, order picking and other logistical tasks for end-of-line or distribution automation.
- Offering improved operation speed over conventional models, a performance-driven design with exceptionally fast axis speeds and acceleration reduces cycle time and increases production throughput.
- Internally routed airlines and cables from base to the end-of-arm tool maximizes reliability.
- Cable installation tube facilitates fieldbus routing to the upper arm and/or gripper.
- Single power and control cable reduces wiring time and increases work efficiency.
- Modular robot harness design for improved diagnostics and maintenance.
- Home position data can be saved without battery connection for easy maintenance.
- The PL80 has an IP67 rated wrist and IP54 body as standard.
- The PL80 can be floor-mounted. Brakes are included on all axes.
- Compact YRC controller utilizes the lightweight teach pendant with intuitive programming.
- Available with PalletSolver® software for fast and easy creation of palletizing patterns.

PL80 ROBOT

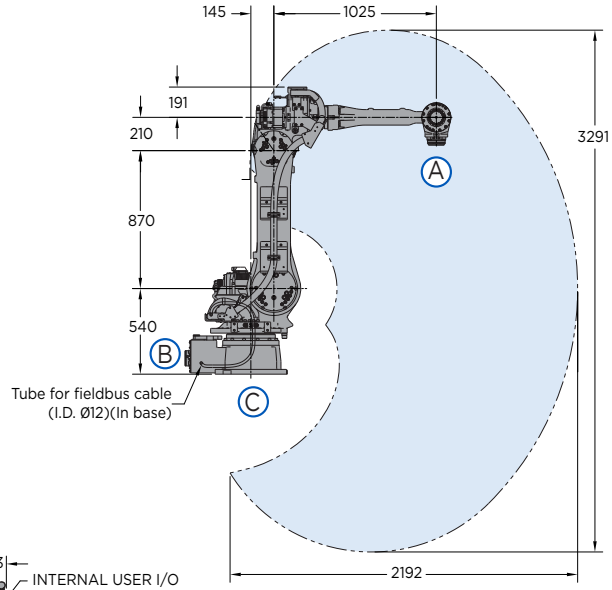

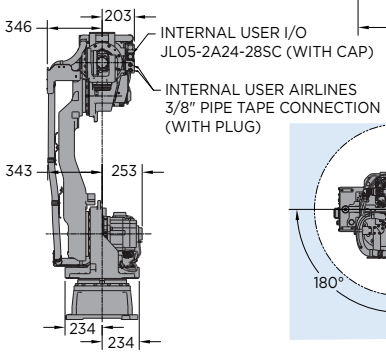

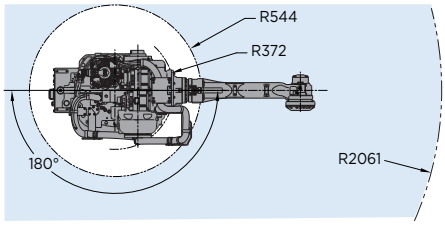

VIEW A

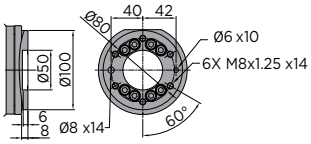

VIEW B

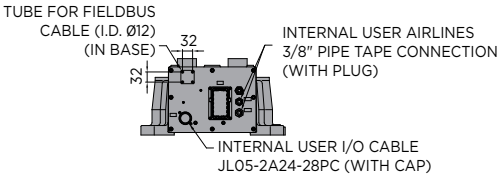

VIEW C

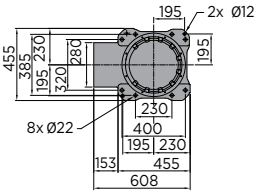

All dimensions are metric (mm) and for reference only.
Request detailed drawings for all design/engineering requirements.

SPECIFICATIONS

Axes	Maximum motion range	Maximum speed	Allowable moment	Allowable moment of inertia
	degrees	°/sec	N•m	kg•m²
S	±180	180	–	–
L	+135/-90	180	–	–
U	+35/-160	180	–	–
B	+15/-15	180	78.4	48
T	±360	500	20.5	25

Mounting Options: Floor
* MLX300 fieldbus cards, I/O cards and vision equipment must be purchased separately from the supplier. All peripherals are programmed using a PLC.

Item	Unit	PL80
Controlled axes		5
Maximum payload	kg	80
Repeatability	mm	0.03
Horizontal reach	mm	2,061
Vertical reach	mm	3,291
Weight	kg	565
Internal user I/O cable		23 conductors w/ ground
Internal user air line		(2) 3/8" connection
Power requirements		380-480 VAC
Power rating	kVA	4.5

OPTIONS

- Robot risers and base plates
- Extended length manipulator cables
- Wide variety of fieldbus cards
- External axes
- Functional Safety Unit (FSU)
- PLC integration via MLX300 software option*
- MotoSight™ 2D and 3D vision
- PalletSolver software

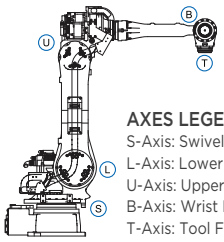

AXES LEGEND
S-Axis: Swivel Base
L-Axis: Lower Arm
U-Axis: Upper Arm
B-Axis: Wrist Bend
T-Axis: Tool Flange

YASKAWA

YASKAWA AMERICA, INC. 100 Automation Way | Miamisburg, OH 45342
937.847.6200 | motoman.com

Technical specifications subject to change without notice. | Motoman is a registered trademark.
All other marks are the trademarks and registered trademarks of Yaskawa America, Inc.
DS-967 ©2021 Yaskawa America, Inc. NOVEMBER 2021