DENSO

www.densorobotics-europe.com

"The highest evolution of the arm"

Global companies **trust** in DENSO robots.

Airbus

Airbus is a leading aircraft manufacturer, it forms part of EADS, a global leader in aerospace, defence and related services. This group – which is comprised of Astrium, Cassidian and Eurocopter, in addition to Airbus – has a presence on every continent, and employs a total workforce of more than 119 000.

"The Airbus low speed wind tunnel (LSWT) in Bremen enables wind tunnel tests in internal facilities and supplies wind tunnel models with instrumentation for internal and external facilities. Its mission is also the design and monitoring of the manufacture and calibration of new engine simulators for wind tunnels.
A continuous control of the probes which are used in wind tunnel tests is required after test campaigns in the different wind tunnels. Multi-hole pressure probes, such as five- and seven-hole probes, are cost-effective devices which provide accurate flow measurements in the different wind tunnel tests. All the probes used are calibrated, and once they have been used in a wind tunnel test campaign, they will be controlled with the DENSO VM-60B1G-V in order to determine the new calibration required, or to follow on with more test campaigns (structural characteristic maintained). This control will be performed by placing the probe in a flowfield with known velocity magnitude and direction. The movements are enabled by the DENSO VM-60B1G-V, and the new characteristic values are compared with the calibration values.

The LSWT wind tunnel Airbus utilizes DENSO robots because the control of these robots is very flexible and can be integrated in the wind tunnel measurement environment without changing existing software philosophy."

Eva-Maria Mendez Montilla, Aerodynamics Testing, AIRBUS Airbus Operations GmbH, Germany

Danfoss

Danfoss is a family owned, global company employing 26 000 staff worldwide. Producing 250 000 components per day from 93 factories in 25 countries, it has 140 sales companies and over 450 global dealers and distributors.

One of Danfoss factories in Denmark, utilizes approximately 40 DENSO robots.

"We prefer to use a single brand of robot in our production process and chose DENSO as it could offer the largest range of models. We wanted to use the combined approach to programming for all of our robots, and DENSO uses the same programming and unit for both Scara and 6-axis robots."

Svend Arne Dynnweber, Project Manager for Danfoss, Denmark

ABOUT DENSO ROBOTICS

06 | Technology with tradition
07 | The ultimate answer
08 | Increasing your productivity
10 | Flexible. Fast. Effective.
11 | Intelligent interaction
12 | We're only satisfied when you are
13 | Our worldwide network
14 | DENSO delivers. Every time.
16 | A full line-up of small industrial robots

DENSO 6-AXIS ROBOTS

18 | Denso 6-axis robots
20 | VP Series
22 | VP-G2 Series
26 | The new VS Series
28 | The new VS Series - an overview
30 | New VS Series
34 | VS Series
36 | VM Series

DENSO 4-AXIS ROBOTS

38 | Denso 4-axis robots
40 | HS Series
42 | HM Series
44 | XR Series

PROGRAMMING DENSO ROBOTS

46 | Robot controllers
48 | The new RC8
50 | RC7
52 | Accessories - an overview
53 | DENSO teaching & mini pendants
54 | Motor & encoder cables, I/Os, field busses & communication boards
55 | Special accessories for the new VS Series
56 | Programming DENSO robots
57 | WINCAPS III
58 | b-CAP
59 | ORiN2
60 | ORiN Vision
61 | HALCON Extension Package
62 | e.vision
63 | Robot Tools
64 | ROSY - Robot Optimization System
65 | 3DCreate®

TECHNOLOGY WITH TRADITION

The new VS-087

When you choose a robotic solution from DENSO you can rest assured that you are investing in a product of the highest calibre. Our commitment to quality and customer satisfaction is, quite simply, second-to-none.

DENSO Robotics is proud to be a part of the DENSO Corporation, which is recognised as one of the 500 largest companies worldwide (Fortune Global 500) and is also one of the two largest automotive parts manufacturers in the world.

It is this strength in depth that allows DENSO Robotics to be such a pioneering force. In fact, our vision and aptitude have seen the company become the recognised worldwide leader in small robotic design and manufacturing.

When industrial robots first appeared in the early 1960s, DENSO began to develop and apply the emerging technologies to its own production processes, allowing the company to constantly improve and advance the hardware and software.

And now, today, as the established market leader in the small assembly industrial robot segment, DENSO Robotics continues to set the benchmark in reliability, flexibility and functionality. With more than **60 000 DENSO robots installed across the globe – 16 000 of which are employed in its own manufacturing facilities** – no other company has more knowledge or expertise.

DENSO Robotics is the automatic choice when it comes to industrial robot arms.

THE ULTIMATE ANSWER

Whatever challenge you face, DENSO Robotics has the answer. Our product range includes four-axis (SCARAs) and five and six-axis robots. All of which are defined by their outstanding speed, precision and build quality.

For the pinnacle in functionality, our robots can manage payloads of up to 20 kg and offer a maximum arm reach of up to 1298 mm. Compact, light and requiring only minimal periodic maintenance (e.g. our 6-axis robots have been manufactured with lifetime greasing), our entire robot range also comes with a class leading two-year guarantee.

To add to the cost efficiency and ease of use of our robots, there is only one controller type for all robot models, you only need one controller for each robot. DENSO robots have also been designed to operate in virtually any environment including dusty, wet or clinical surroundings. The protection ratings of our robots are classed as follows:

- Standard
- Dust & splash proof (IP65/54)
- Protected (IP67)
- Clean room classes ISO 5 and 3
- H_2O_2 resistant (Hydrogen Peroxide; commonly used for sterilization purposes in the pharmaceutical and medical industries)
- UL specifications (for the USA and Canada)

EXAMPLE OF CONFIGURATION (ROBOT + CONTROLLER + TEACHING PENDANT + ACCESSORIES (E.G. I/OS))

*NOTE: All robot models include a controller.

As further testament to DENSO Robotics credentials and reputation in the robotic arm marketplace, important competitors rely on us to supply them with unbranded hardware so they can increase and complete their own product ranges.

There is no better answer than DENSO Robotics.

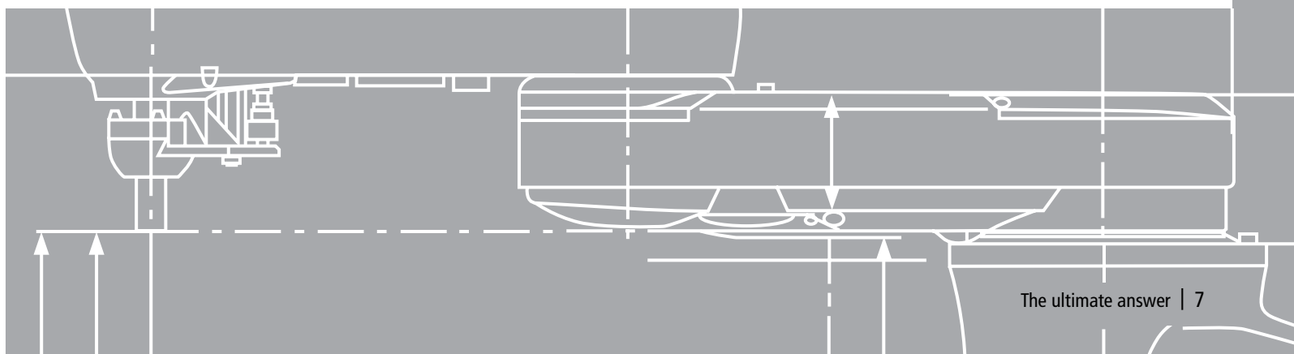

INCREASING YOUR PRODUCTIVITY

INCREASING YOUR SUCCESS

As a business operating in today's global economy, it is imperative to be as lean and proficient as possible without compromising anything in terms of quality and service.

Consumers demand the highest class of products at the most competitive prices. And shareholders expect a positive return on their investments.

So how do you establish an advantage while still maintaining integrity?

How do you ensure that your systems are delivering the most effective TCO?

That's where DENSO Robotics can help.

We can reduce your production costs and increase your speed to market in the following ways

- The unparalleled speed and precision of our robots save you time. Processes are completed faster and more accurately
- Our robots are hugely reliable and durable. There is minimal down time. And that means your production procedures operate at maximum efficiency
- The highly compact and lightweight design of our robots saves space. There is no unnecessary bulk or equipment. Your manufacturing area is utilised to its full capacity
- Our robots require the minimum amount of servicing and upkeep. Which means they constantly perform without the time and expenditure incurred by regular maintenance
- Because of their low energy consumption, DENSO robots keep power costs to a minimum while also helping the environment

Putting the environment first

The environment is a crucial consideration during the production of DENSO robots and we are completely dedicated to reducing the use of hazardous substances.

Our awareness and commitment mean that DENSO robots are an environmentally friendly, ultra efficient and highly profitable investment. Our robots have been conceived for low energy consumption. For this, they have been provided with standard electric sockets for their use with 230V energy sources. Ultimately, our products and systems can help realise the full potential of your business in an eco-friendly manner.

FLEXIBLE. FAST. EFFECTIVE.

From general manufacturing through to the pharmaceutical sector, a huge range of industries can benefit from the ways DENSO robots streamline and improve processes and procedures.

The versatility and advanced functionality of our products allow them to be programmed for virtually any situation where a robotic arm is applicable. Whether the requirement is for straightforward "pick and place" or incredibly complex tasks and routines, such as the fully automated preparation of a medical injection, DENSO robots are at the forefront of today's industrial applications.

Here is a brief overview of where and how DENSO Robotics can add value and efficiency to your business.

Industries:

- Appliances
- Automotive
- Chemicals
- Consumer products
- Electronics
- Food
- General manufacturing
- Greenhouse
- Machine tools
- Medical devices
- Pharmaceuticals
- Semiconductor
- Plastics
- And many others

Applications:

- Pick & place
- Assembly
- Packaging
- Dispensing
- Palletizing
- Inspection
- Material removal
- Material handling
- Electrostatic welding
- Customised projects

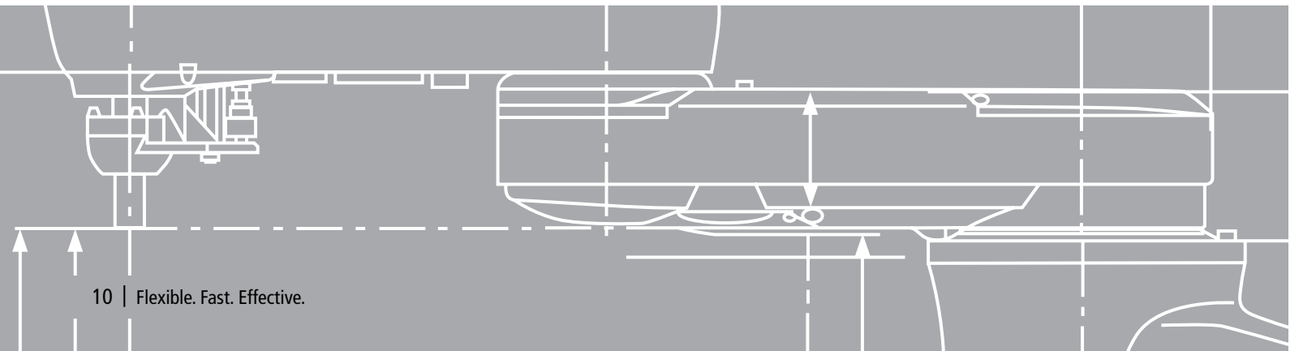

INTELLIGENT INTERACTION

DENSO robots have been conceived and produced so that programming them is as convenient and user-friendly as possible. We have developed a range of tools that allow you to interact with our robots in a manner you find the most comfortable and familiar.

For ease and simplicity, all DENSO robot controllers have a standard Ethernet connection for attaching to another device such as a PLC or industrial PC.

The adaptable choice of ways that you can input instructions into DENSO robots includes the following:

Teaching pendant:

- DENSO touch screen teaching pendant

PC-based solutions:

- WINCAPS III
  DENSO's proprietary off-line programming, monitoring and simulation software
- ORiN2
  Innovative middleware that enables the use of existing high level languages, including C++, C#, Visual Basic and Java, etc. to program DENSO robots, therefore eliminating the requirement to learn any new robot programming language
- NI LabVIEW™ software
  DENSO has developed a sample program (based on ORiN2) which allow users to program their robotics applications using the graphical programming language from National Instruments™ LabVIEW™
- b-CAP
  binary Controller Access Protocol is an option available within ORiN2. The system is based on TCP/IP or UDP and connects to DENSO robots and peripheral devices via a PC, PLC or any other appropriate device that includes an Ethernet TCP/IP connection
- HALCON extension package
  Dedicated extension package to enable HALCON from MVTec and DENSO users to conveniently program and control DENSO robots and their vision applications through the same simple graphical interface

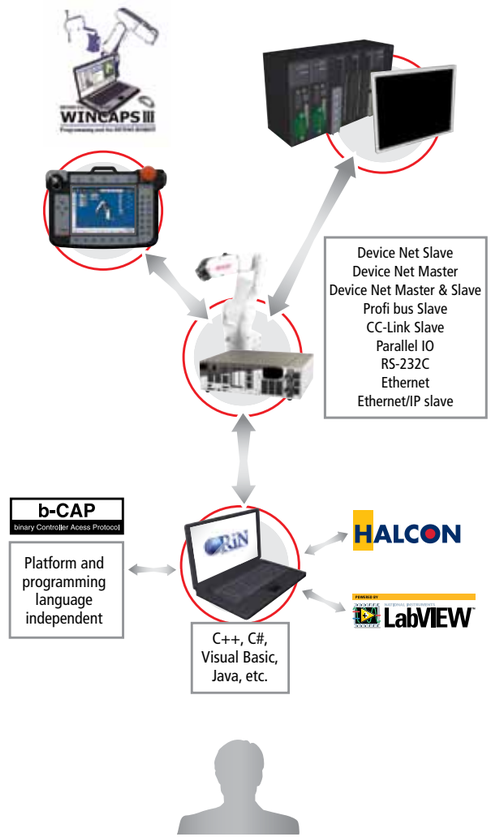

NI LabVIEW™ Software is trademark of National Instruments™ HALCON and MVTec are registered trademarks

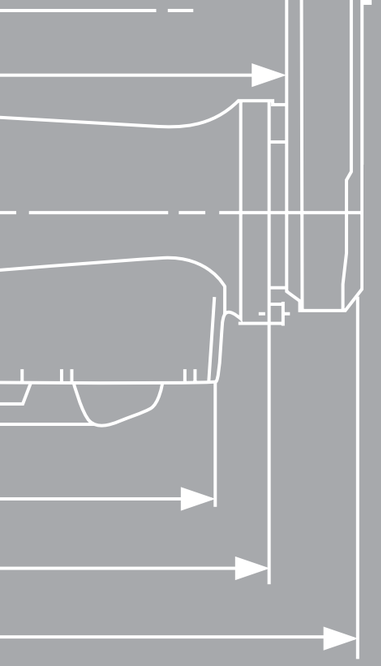

WE'RE ONLY SATISFIED
WHEN YOU ARE

Cutting edge technology, class leading products and groundbreaking systems are only part of what you can expect when you choose DENSO Robotics.

Our international customer support facility also leads the way in terms of service and delivery. We provide a highly personalised, professional and friendly resource to help with all of your questions and queries. Whether you need one-to-one assistance over the telephone, or a physical site visit, our teams of highly qualified engineers, technicians and partner system integrators are ready and waiting all over the globe.

DENSO Robotics provides in Europe the following services:

Training[1]

- Operator training: This training is intended for robot operators or people in charge of performing maintenance on it
- Basic programming
  This training embraces the tasks and procedures that an operator, technician, engineer or programmer needs to set up and program a robot
- Advanced programming:
  This training is offered after Operator Training and Basic Programming has been carried out. Knowledge acquired in these previous trainings will be required in order to develop a more complex scenario
- ORiN2:
  Introduction to PC-based robot applications created with a common high-level programming language (Visual Studio)
- Maintenance training:
  This training is directed for maintenance personnel responsible for the installation and maintenance of any system. The training provides detailed instructions and procedures necessary to perform complete disassembly, inspection, repair and reassembly of a DENSO robot mechanical unit
- Programming support:
  Software development for robot applications
- Technical support:
  This includes: Robot application simulations, cycle tests, troubleshooting, technical consulting
- Absolute accuracy calibration service:
  We help you to increase the already precise accuracy of your DENSO robot.
- Robot repair centre[2]:
  An expert team of professionals at our repair centre in the Netherlands provides our customers a reliable and fast service.
- On-site services:
  - Programming Support
  - Maintenance
  - Repair
  - Troubleshooting
- Spare parts delivery[2]:
  Fast spare part availability through our world's largest warehouse outside Japan.

In the world of robotics, we never forget that the human touch is the most important one of all.

[1] Our Training Centre is located in Mörfelden-Walldorf, Germany; near Frankfurt airport
[2] Our warehouse is located in The Netherlands

OUR WORLDWIDE NETWORK

Our international network of offices provides comprehensive service and support all over the world.

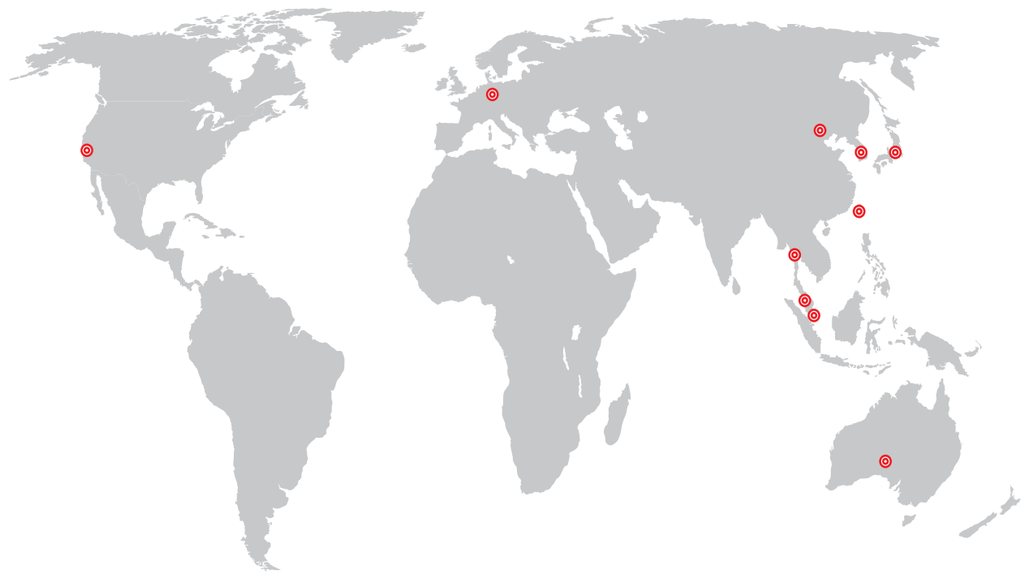

DENSO WAVE INCORPORATED
1 Yoshiike, Kusaki, Agui-cho
Chita-gun, Aichi 470-2297
JAPAN
Tel: +81 569 49 5018
Fax: +81 569 49 5484
faoverseas@denso-wave.co.jp

DENSO EUROPE B.V.
Waldecker Str. 9
D-64546 Moerfelden – Walldorf
GERMANY
Tel: +49 (0) 6105 27 35 150
Fax: +49 (0) 6105 27 35 180
info@densorobotics-europe.com

DENSO SALES CALIFORNIA INC.
3900 Via Oro Avenue
Long Beach, California
90810 U.S.A
Tel: + 1 310 834 6352
Fax: + 1 310 513 7379
info@densorobotics.com

DENSO SALES KOREA CORPORATION
8F, JPlus B/D, 16-13, Yangjae-dong
Seocho-gu, Seoul, 137-130
KOREA
Tel: +82-2-460-0694
Fax: +82-2-3452-7484
haedon_lee@densokorea.co.kr

DENSO (CHINA) INVESTMENT CO. LTD.
Room No.518, The Beijing Fortune
Building, No.5 Dong SanHuan
Bei-Lu, ChaoYang District, Beijing
CHINA 100004
Tel: +86-10-6590-8337
Fax: +86-10-6590-9044
fa-support@denso-wave.co.jp

DENSO INTERNATIONAL ASIA PTE. LTD.
51 Science Park Road
Unit + ACM – 01-19
The Aries, Science Park II
SINGAPORE 117586
Tel: +65 6771 2423
Fax: +65 6776 8698
fa-support@denso-wave.co.jp

DENSO TAIWAN CORPORATION
No.525, Sec2, Mei Su Rd.
Jui Ping Li, Yang Mei Town
Taoyuan Hsien
TAIWAN
Tel: +886-3-482-8001
Fax: +886-3-482-8003
fa-support@denso-wave.co.jp

DENSO SALES (THAILAND) CO. LTD.
888 Moo 1 Bangna - Trad Rd.
KM. 27. 5, T. Bangbo, A. Bangbo
Samutprakam 10560
THAILAND
Tel: +66-2-315-9500
Fax: +66-2-315-9556
fa-support@denso-wave.co.jp

DENSO (MALAYSIA) SDN. BHD.
Ground Floor, No.14, Jalan
Glenmarie
(Persiaran Kerjaya) Section U1
40150 Shah Alam, Selangor
Darul Ehsan
MALAYSIA
Tel: +60-3-5569-9933
Fax: +60-3-5567-3301
fa-support@denso-wave.co.jp

DENSO AUTOMOTIVE SYSTEMS AUSTRALIA PTY LTD.
2-46 Merrindale Drive
Crydon, Victoria 3136
AUSTRALIA
Tel: +61 3 8761 1459
Fax: +61 3 8761 1505
fa-support@denso-wave.co.jp

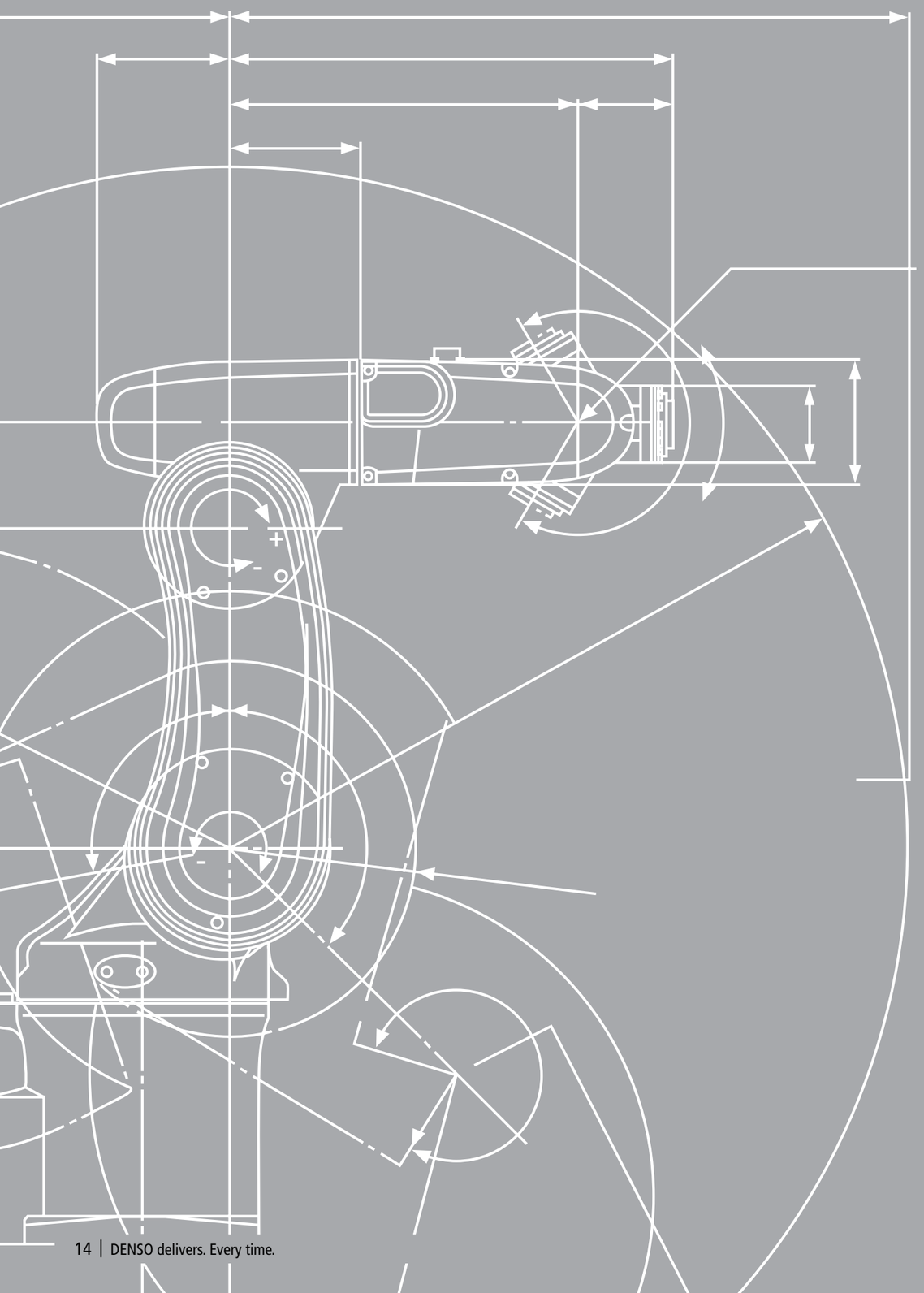

DENSO delivers.
Every time.

Over the following pages you will discover details about the fantastic choice of product ranges and programming software solutions that DENSO offers.

Whatever challenge you face, **DENSO** can help.

A FULL LINE-UP OF SMALL INDUSTRIAL ROBOTS

6 axis robots

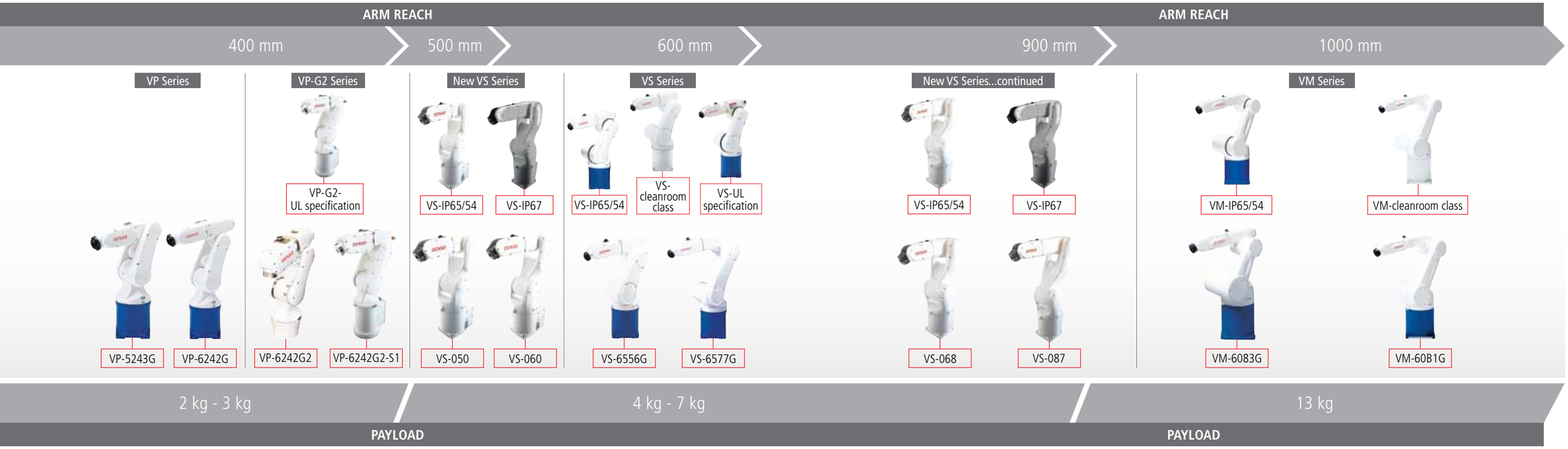

4 axis robots

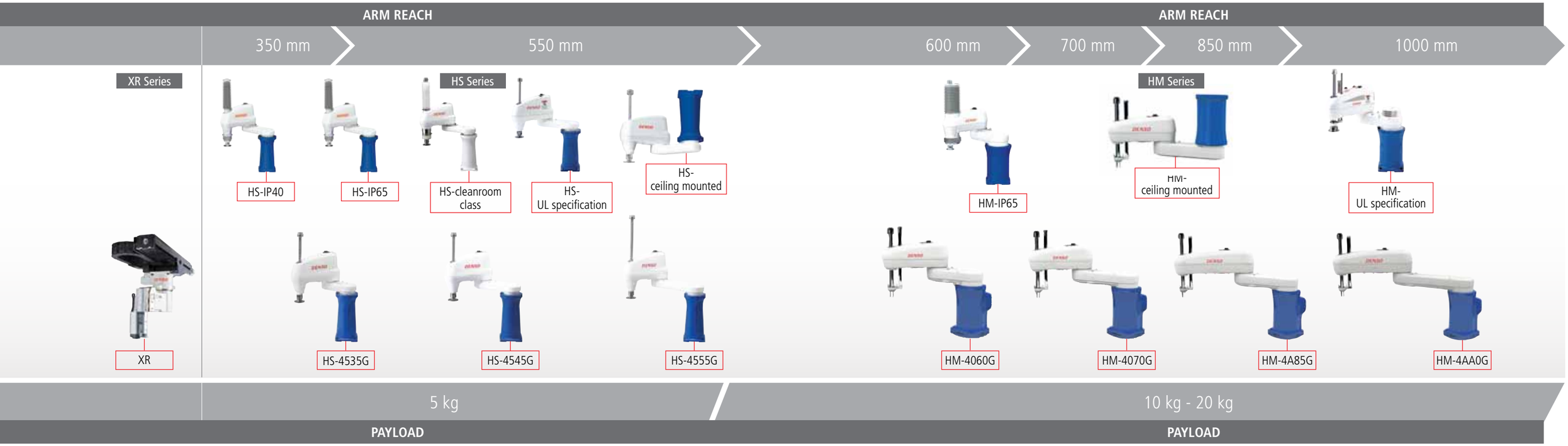

DENSO 6-AXIS ROBOTS

The DENSO range of 6-axis robots includes the VP Series, the New VS Series, the VS Series and the VM Series.

These robots provide greater flexibility and improved performance over their 4-axis counterparts. Because of their increased scale of movement, they are suited to handle a far wider range of applications without compromising either speed or precision.

DENSO 6-axis robots are the ultimate solution for the following:

Applications

- Assembly
- Inspection
- Matching
- Material handling
- Material tending
- Packaging
- Palletizing
- Electrostatic welding
- Bespoke applications

DENSO 6-axis robots deliver the following industry leading specifications:

Main Features

- Fastest possible cycle time up to 0.33 s
- Repeatability from ±0.02 mm
- Maximum composite speed up to 11 000 mm/s
- Arm lengths up to 1298 mm
- Payloads up to 13 kg
- All models include internal wiring (the new VS Series up to the end of flange as option) and air piping for maximum efficiency in restricted spaces

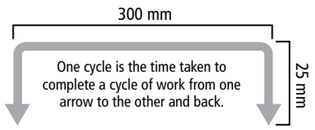

Options

- Standard
- Dust & splash proof (IP65/54)
- Protected (IP67)
- Up to clean room class ISO 3
- Hydrogen peroxide-resistant (H_2O_2) for aseptic environments
- UL specifications (for the USA and Canada)

product design award 2011

The new VS-087

KEY FEATURES

VP SERIES

The DENSO 6-axis VP Series of robots is perfect for installations where operational space is limited and payloads up to 3 kg are needed.

Key Features

- Exceptional precision: ±0.02 mm
- Fastest possible cycle time: 0.99 s
- Maximum composite speed: 3900 mm/s
- Payloads: up to 3 kg
- Arm reach: 430 mm and 432 mm
- Mounting options: floor and ceiling
- Manoeuvrability in restricted spaces: robot footprint is only 160 mm x 160 mm
- Exceptionally light weight: robot arm weighs from 13 kg
- ANSI and CE compliance: allows global deployment. Choose a Safety board / Safety box controller

VP-5243G

Axis: 5
Maximum motion area: 430 mm
Maximum payload: 2.5 kg (3 kg at wrist direction downward)

VP-6242G

Axis: 6
Maximum motion area: 432 mm
Maximum payload: 2 kg (2.5 kg at wrist direction downward)

		Unit	VP-5243G	VP-6242G
Number of axis			5	6
Mounting configuration			Floor, Ceiling	Floor, Ceiling
Arm configuration	Protection degree		IP30	
	Clean room		-	-
UL specification			-	-
Maximum motion area (Point P: Wrist center)		mm	430	432
Payload		kg	2.5 (3 kg at wrist direction downward)	2 (2.5 kg at wrist direction downward)
Motion range	J1	deg	±160	±160
	J2		±120	±120
	J3		+136, -128	+160, +19
	J4		-	±160
	J5		±120	±120
	J6		±360	±360
Maximum composite speed		mm/s	3900 (at the center of an end-effector mounting face)	
Cycle time		s	0.99	0.99
Position repeatability (1)		mm	±0.02 (2)	
Allowable inertia	J4	kgm^2	-	0.03
	J5		0.04	0.03
	J6		0.01	0.007
Weight		kg	Approx. 13	Approx. 15
User signal line			9 (for proximity sensor signals, etc.)	
Pneumatic pipe			4 systems (φ4x4)	
Brakes			Brakes for all joints	

1. Position repeatability is the value at constant ambient temperature. 2. In every direction.

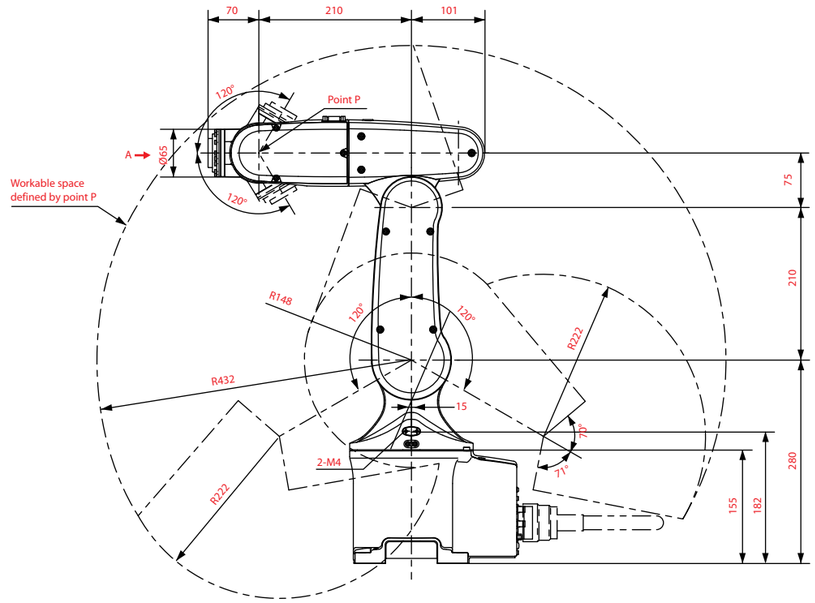

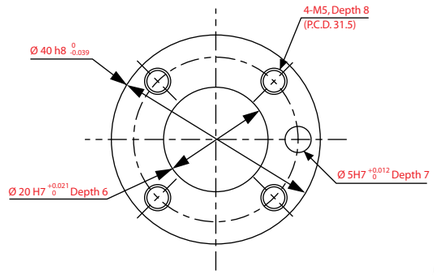

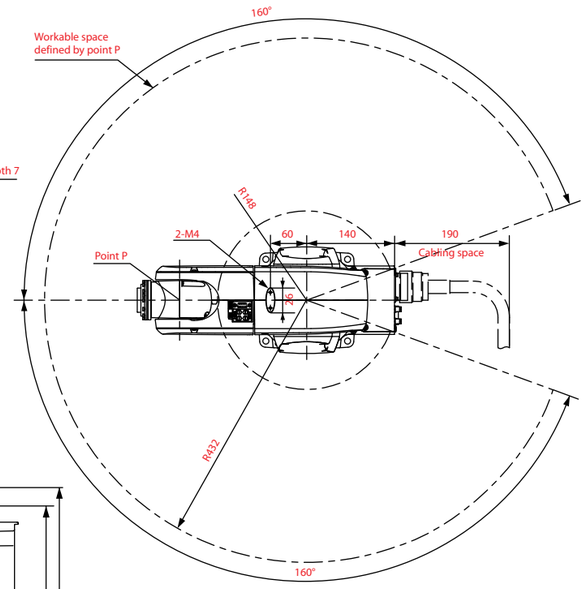

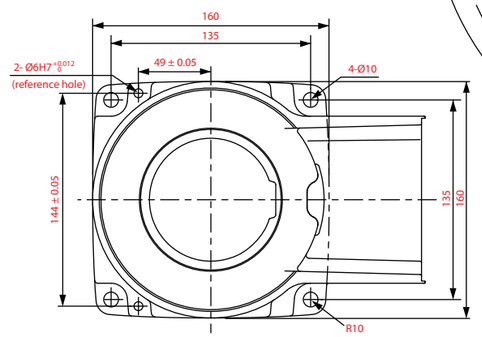

Unit: mm

KEY FEATURES

VP-G2 SERIES

Like the VP-G series, the VP-G2 Series is ideal for compact applications that require small payloads (up to 2 kg).

In addition to the features of the VP-G series, the VP-G2 series offers the following advantages:

- Standard bottom-side cable connection
- 18 user signal lines for proximity sensor signals, etc.
- Available with UL specifications (for the USA and Canada)
- Available in clean room class ISO 5 + 6% hydrogen peroxide H_2O_2 wipe for pharmaceutical and medical applications

Some industries such as the pharmaceutical and medical require strict sterilization standards at their production facilities. There are microorganisms that can cause tremendous harm to humans if they are present in certain products (e.g. parental drugs). In order to avoid this risk, it is necessary to use certain sterilization chemicals such as H_2O_2 to keep production facilities free of contamination.

Nonetheless, some of these substances might be corrosive for surrounding equipment. For this reason, it is necessary that the equipment employed in such environments has certain properties to protect it against such substances.

The new **VP-G2-S1** provides anodized aluminium coverings and a protective outer coating, as well as specially sealed joints that protect the robot against corrosion.

The robot model VP-G2-S1 for pharmaceutical and medical applications offers:

- Hydrogen peroxide-washable surface (wipe): anodized aluminium coverings and a protective outer coating, as well as specially sealed joints, protect robot against corrosion (6% H_2O_2 concentration)
- Class ISO 5 clean room performance: designed for clean rooms and other contamination-control environments
- Certified by the Fraunhofer IPA, one of Europe's leading and most respected Research Institutes for Manufacturing Engineering and Automation
- Ultra compact, space-saving design: 432 mm reach, yet only a 200 mm dia. Footprint
- Bottom-side cable connection: removes cables from clean room environment, facilitates robot cleaning
- Low energy consumption: total capacity of motors less than 300 W
- ANSI and CE compliance: allows global deployment. Choose a Safety board / Safety box controller
- UL specifications (for the USA and Canada)
- Hygienic design based on Good Manufacturing Practice (GMP) and European Hygienic Engineering & Design Group (EHEDG)

A TAILOR-MADE SOLUTION FOR THE PHARMACEUTICAL AND MEDICAL INDUSTRIES, THE NEW VP-G2-S1

KEY FEATURES

VP-G2 SERIES

VP-6242G2

Maximum motion area: 430 mm
Maximum payload: 2 kg
Optional: UL available

VP-6242G2-S1

For pharmaceutical and medical applications
Maximum motion area: 432 mm
Maximum payload: 2 kg
Clean room class ISO 5 + 6% hydrogen peroxide H_2O_2 wipe
Optional: UL available

		Unit	VP-6242G2	VP-6242G2-S1
Number of axis			6	6
Mounting configuration			Floor	Floor
Arm configuration	Protection degree		IP40	-
	Clean room		-	Class ISO 5 + 6% hydrogen peroxide (H_2O_2) wipe
UL specification			✔	✔
Maximum motion area (Point P: Wrist center)		mm	432	432
Payload		kg	2	2
Motion range	J1	deg	±160	±160
	J2		±120	±120
	J3		+160, +19	+160, +19
	J4		±160	±160
	J5		±120	±120
	J6		±360	±360
Maximum composite speed		mm/s	3900 (at the center of an end-effector mounting face)	
Cycle time		s	0.99	0.99
Position repeatability (1)		mm	±0.02 (2)	
Allowable inertia	J4	kgm^2	0.03	0.03
	J5		0.03	0.03
	J6		0.007	0.007
Weight		kg	Approx. 24	Approx. 25
User signal line			16 (for proximity sensor signals, etc.)	
Pneumatic pipe			4 systems (ϕ4x4)	
Brakes			Brakes for all joints	

1. Position repeatability is the value at constant ambient temperature. 2. In every direction.

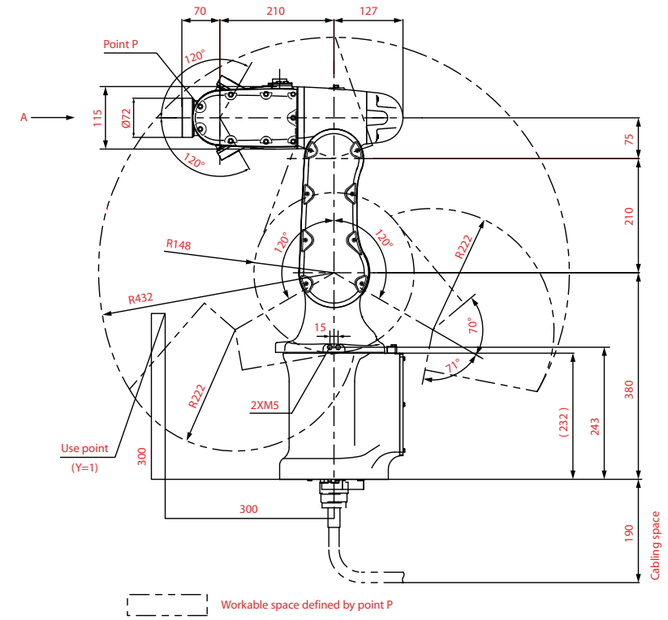

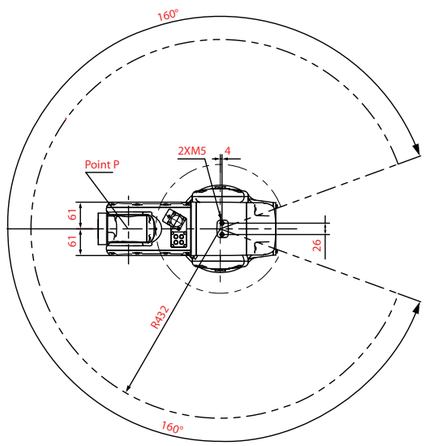

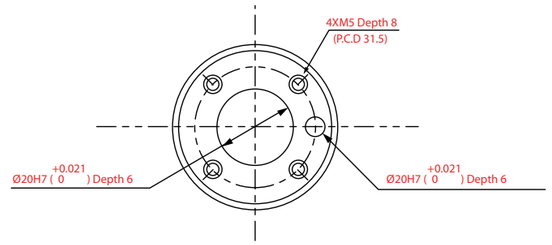

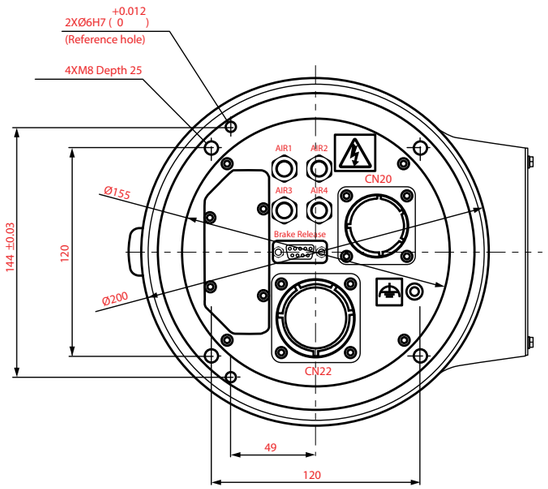

Unit: mm

THE NEW VS SERIES

NEW

DENSO proudly presents its new VS Series. These new 6-axis robots are characterized as being extremely:

- FAST (up to 11 000 mm/s)
- PRECISE (from ±0.02 mm)
- FLEXIBLE (install them on floors, ceilings or walls)

In addition:

- Their extremely slim and compact design allows you to save on installation space
- You also have the possibility to place the motor and encoder cable underneath the robot base
- They offer you payloads up to 7 kg, delivering you the best performance possible

Connectivity

The optional "Communication Interface" allows users to connect Gigabit Ethernet devices and Servo Grippers easily and directly to the robot flange, thanks to an innovative communication internal wiring. This gives users the advantage of avoiding the risk of cables and connections tangling up within their surroundings.

Resistant

You can employ these robots in extremely wet conditions thanks to their optional protection class IP67 (which resists even high pressure washing and cutting chips).

Have a look at the new VS Series and convince yourself why we're pioneers in robotics. It is worth it!

product design award 2011

The new VS-087

THE NEW VS SERIES

AN OVERVIEW

Fast motion for improved productivity

Pick & place / maximum composite speed:

	VS-050	VS-068
Pick & place time [s] at 1 kg (measurement)	0.37	0.33
Maximum composite speed [mm/s]	9000	11 000

Pick & Place time

Time required for a robot to lift an object to a height of 2.5 cm and move back and forth between two locations 30 cm apart.

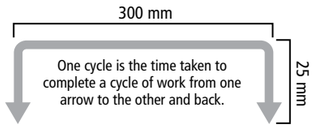

Can be integrated into compact equipment

Arm width/wrist width/motion area

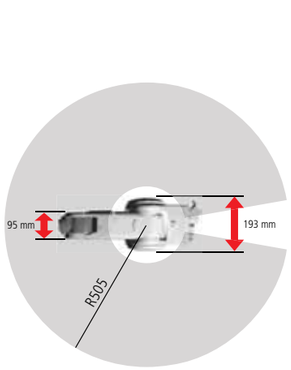

VS-050

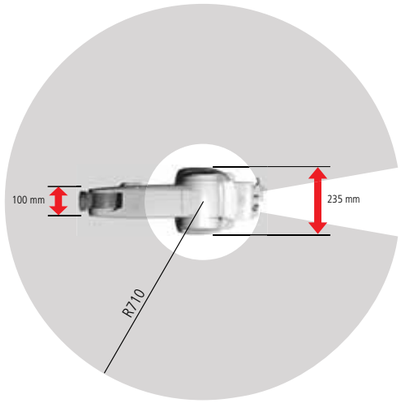

VS-068

Efficient use of dead space

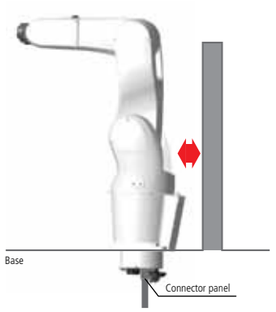

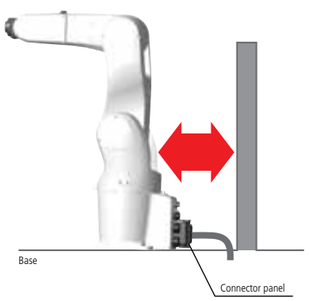

4 ARM LENGTHS AVAILABLE

VS-050
Maximum motion area: **505 mm**
Maximum payload: **4 kg**

VS-060
Maximum motion area: **605 mm**
Maximum payload: **4 kg**

VS-068
Maximum motion area: **710 mm**
Maximum payload: **7 kg**

VS-087
Maximum motion area: **905 mm**
Maximum payload: **7 kg**

Improved usability and maintainability

Embedded internally up to end-of-arm flange, wires are prevented from becoming entangled and broken.

New VS Series options

Connector panel

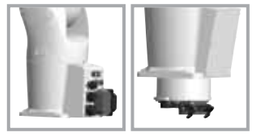

Rear connector panel — Bottom connector panel

Choose from two mounting orientations when connecting cables (robot-to-controller cable, etc.) to the robot for increased flexibility accommodating user's robot installation conditions.

Flange

Communicaton interface flange-A

Flange has connectors for electrical signals and Ethernet, allowing wiring to be embedded in the robot unit. Use them to connect a motorized hand, camera, etc.

Signal lines & air piping

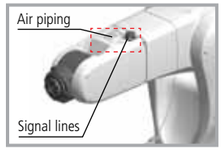

Signal lines and air pipe solenoid valves are embedded in the top area of the second arm. Three varieties are available for VS-068 / 087 and one for VS-050 / 060.

Paint / surface finish

DENSO standard colors — Unpainted

Where Protected type (IP67) is selected, the unit is left as unpainted aluminum. Protected type (IP67) plus standard coloring is available as (optional) extra specification. Contact us for further information.

External battery extension unit

Encoder backup battery installed outside the robot facilitates replacement of batteries and improves maintainability.

Brake release unit

A Switch that allows you to release the brake of each axis (wiring of this switch is directly connected to the brake release signal of each axis).

Air purge unit

The Protected type (IP67) maintains an IP67 protection level by air pressure produced inside the robot.

Second arm cover R (with tapped holes)

This cover has tapped holes to secure wires for the robot's second arm.

Category	Part name	VS-050 / 060		VS-068 / 087	
		Standard type (IP40)	Protected type (IP67)	Standard type (IP40)	Protected type (IP67)
Connector Panel	Rear connector panel	✔	✔	✔	✔
	Bottom connector panel	-	-	✔	✔
Flange	Standard flange	✔	✔	✔	✔
	Communication interface flange-A	✔	-	✔	-
Signal lines	2 x solenoid valves (2 position, double solenoid)	✔	✔	-	-
	3 x solenoid valves (2 position, double solenoid)	-	-	✔	✔
	3 x solenoid valves (3 position, exhaust center solenoid)	-	-	✔	✔
	3 x solenoid valves (3 position, closed center solenoid)	-	-	✔	✔
Paint/Surface finish	DENSO standard colors	✔	*1	✔	*1
	Unpainted	-	✔	-	✔
External battery extension unit		✔	✔	✔	✔
Brake release unit		✔	✔	✔	✔
Air purge unit		-	✔	-	✔
Second arm cover R (with tapped holes)		✔	-	✔	-

*1. Extra specification (optional). Contact us for further information.

KEY FEATURES

NEW VS SERIES

Thanks to an improved slim design, the New DENSO 6-axis VS Series of robots is perfect for installations where operational space is limited and high speed is needed.

Key Features

- Exceptional precision: ±0.02 mm
- Fastest possible cycle time: 0.37 s
- Maximum composite speed: 9000 mm/s
- Payloads: up to 4 kg
- Arm reach: 505 mm and 605 mm
- Multiple mounting options: floor, wall, ceiling
- Operation in dusty and wet environments (optional specification to IP65/54)
- Resists cutting chips and high-pressure washing, thanks to its optional protection class IP67. (Robot cover in aluminium, no paint. Double lip structure)
- Operation in clean rooms (optional specification to clean room class ISO 5)
- Slim design: width 1st arm 189 mm / 2nd arm 95 mm
- Optional: internal wiring for communication interface to connect to Gigabit Ethernet devices such as GigE cameras (with PoE) and Servo Grippers

		Unit	VS-050	VS-060
Number of axis			6	6
Mounting configuration			Floor, Ceiling, Wall	Floor, Ceiling, Wall
Arm configuration	Protection degree		IP40, IP65/54 (IP65 only in J4, J5 and J6), IP67 (1)	
	Clean room		Class ISO 5	
UL specification			-	-
Maximum motion area (Point P: Wrist center)		mm	505	605
Payload		kg	4	4
Motion range	J1	deg	±170 (2)	±170 (2)
	J2		±120	±120
	J3		+151, -120	+155, -125
	J4		±270	±270
	J5		±120 (installed Communication Interface Flange-A [Option] +120 -110)	
	J6		±360	±360
Maximum composite speed		mm/s	9000	9000
Cycle time		s	0.37 (with 1 kg weight)	0.37 (with 1 kg weight)
Position repeatability (3)		mm	±0.02 (4)	±0.02 (4)
Allowable moment	J4	N·m	6.66	6.66
	J5		6.66	6.66
	J6		3.13	3.13
Allowable inertia	J4	kgm^2	0.200	0.200
	J5		0.200	0.200
	J6		0.050	0.050
Weight		kg	34	35
Signal Line & Air Piping (2nd Arm)	Signal Line		10 line (for proximity sensor signals, etc.) (5), (6)	
	Air Piping		5 systems (φ4x4, φ4x1) -2 x solenoid valves (2 position, double solenoid)	
Communication Interface Flange-A [Option]			17 line power wire for cameras, etc. (5)	
			LAN (1000BASE-T) x 1 (7)	
Brakes			Brakes for all joints	

1. Do not operate the robot in water. 2. Limited motion when wall mounted. 3. Position repeatability is the value at constant ambient temperature. 4. In every direction. 5. Allowable current is limited. 6. 4 lines when Communication Interface Flange-A [Option] is installed. 7. LAN cable connected with robot must be shorter than 20 m.

VS-050

Maximum motion area: 505 mm
Maximum payload: 4 kg

VS-060

Maximum motion area: 605 mm
Maximum payload: 4 kg

Models available in: IP65/54 (IP65 only in J4, J5 and J6) and IP67

Detailed drawing of end-effector mounting facez (Standard Flange)

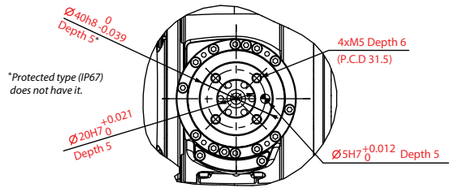

Detailed drawing of base mounting face

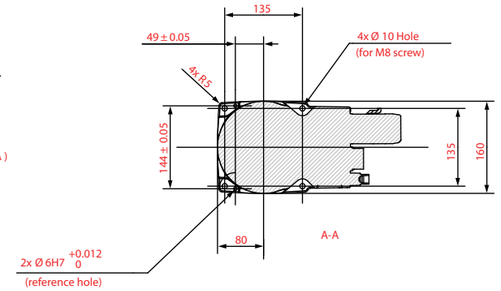

Detailed drawing of end-effector mounting face (Communication Interface Flange-A)

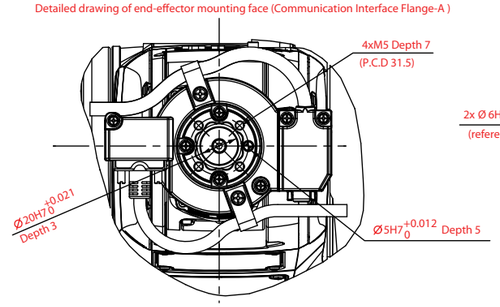

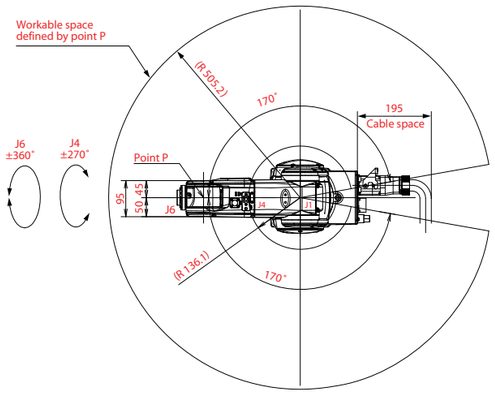

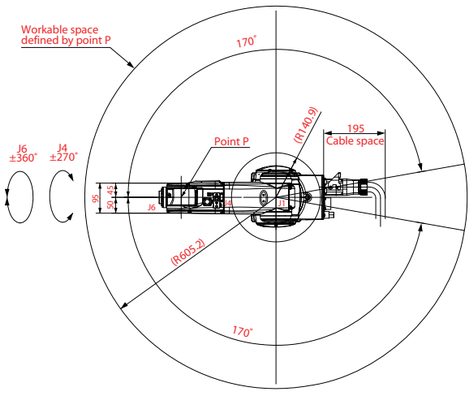

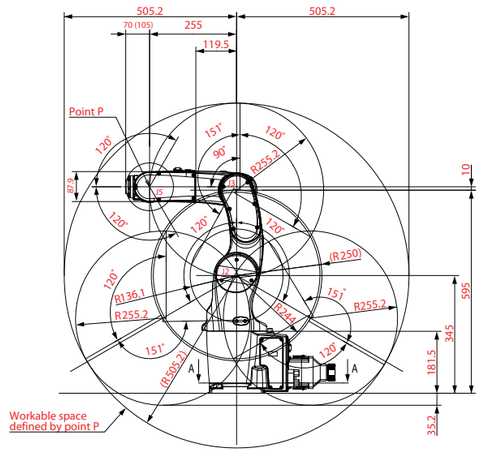

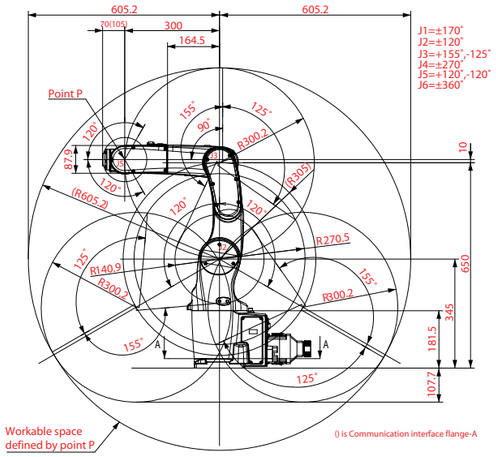

Unit: mm

KEY FEATURES

NEW VS SERIES... continued

The fastest of all 6-axis robots with speeds up to 11 000 mm/s.

Key Features

- Exceptional precision: from ±0.02 mm
- Fastest possible cycle time: 0.33 s
- Maximum composite speed: 11 000 mm/s
- Payloads: up to 7 kg
- Arm reach: 710 mm and 905 mm
- Multiple mounting options: floor, wall, ceiling
- Operation in dusty and wet environments (optional specification to IP65/54 standard)
- Resists cutting chips and high-pressure washing, thanks to its optional protection class IP67. (Robot cover in aluminium, no paint. Double lip structure)
- Operation in clean rooms (optional specification to clean room class ISO 5)
- Slim design: width 1st arm 235 mm / 2nd arm 100 mm
- Optional: internal wiring for communication interface to connect to Gigabit Ethernet devices such as GigE cameras (with PoE) and Servo Grippers
- Optional bottom-side cable connection: facilitates robot cleaning and saves space

		Unit	VS-068	VS-087
Number of axis			6	6
Mounting configuration			Floor, Ceiling, Wall	Floor, Ceiling, Wall
Arm configuration	Protection degree		IP40, IP65/54 (IP65 only in J4, J5 and J6), IP67 (1)	
	Clean room		Class ISO 5	
UL specification			-	-
Maximum motion area (Point P: Wrist center)		mm	710	905
Payload		kg	7	7
Motion range	J1	deg	±170 (2)	±170 (2)
	J2		+135, -100	+135, -100
	J3		+153, -120	+153, -136
	J4		±270	±270
	J5		±120	±120
	J6		±360	±360
Maximum composite speed		mm/s	11 000	11 000
Cycle time		s	0.33 (with 1 kg weight)	0.36 (with 1 kg weight)
Position repeatability (3)		mm	±0.02 (4)	±0.03 (4)
Allowable moment	J4	N·m	16.2	16.2
	J5		16.2	16.2
	J6		6.86	6.86
Allowable inertia	J4	kgm^2	0.450	0.450
	J5		0.450	0.450
	J6		0.100	0.100
Weight		kg	49	51
Signal Line & Air Piping (2nd Arm)	Signal Line		10 line (for proximity sensor signals, etc.) (5), (6)	
	Air Piping		7 systems (φ4x6, φ6x1) -3 x solenoid valves (2 position, double solenoid) -3 x solenoid valves (3 position, Exhaust Center) -3 x solenoid valves (3 position, Closed Center)	
Communication Interface Flange-A [Option]			17 line power wire for cameras, etc. (5)	
			LAN (1000BASE-T) x 1 (7)	
Brakes			Brakes for all joints	

1. Do not operate the robot in water. 2. Limited motion when wall mounted. 3. Position repeatability is the value at constant ambient temperature. 4. In every direction.
5. Allowable current is limited. 6. 4 lines when Communication Interface Flange-A [Option] is installed. 7. LAN cable connected with robot must be shorter than 20 m.

VS-068

Maximum motion area:
710 mm
Maximum payload:
7 kg

VS-087

Maximum motion area:
905 mm
Maximum payload:
7 kg

Models available in:
IP65/54 (IP65 only in J4, J5 and J6) and IP67

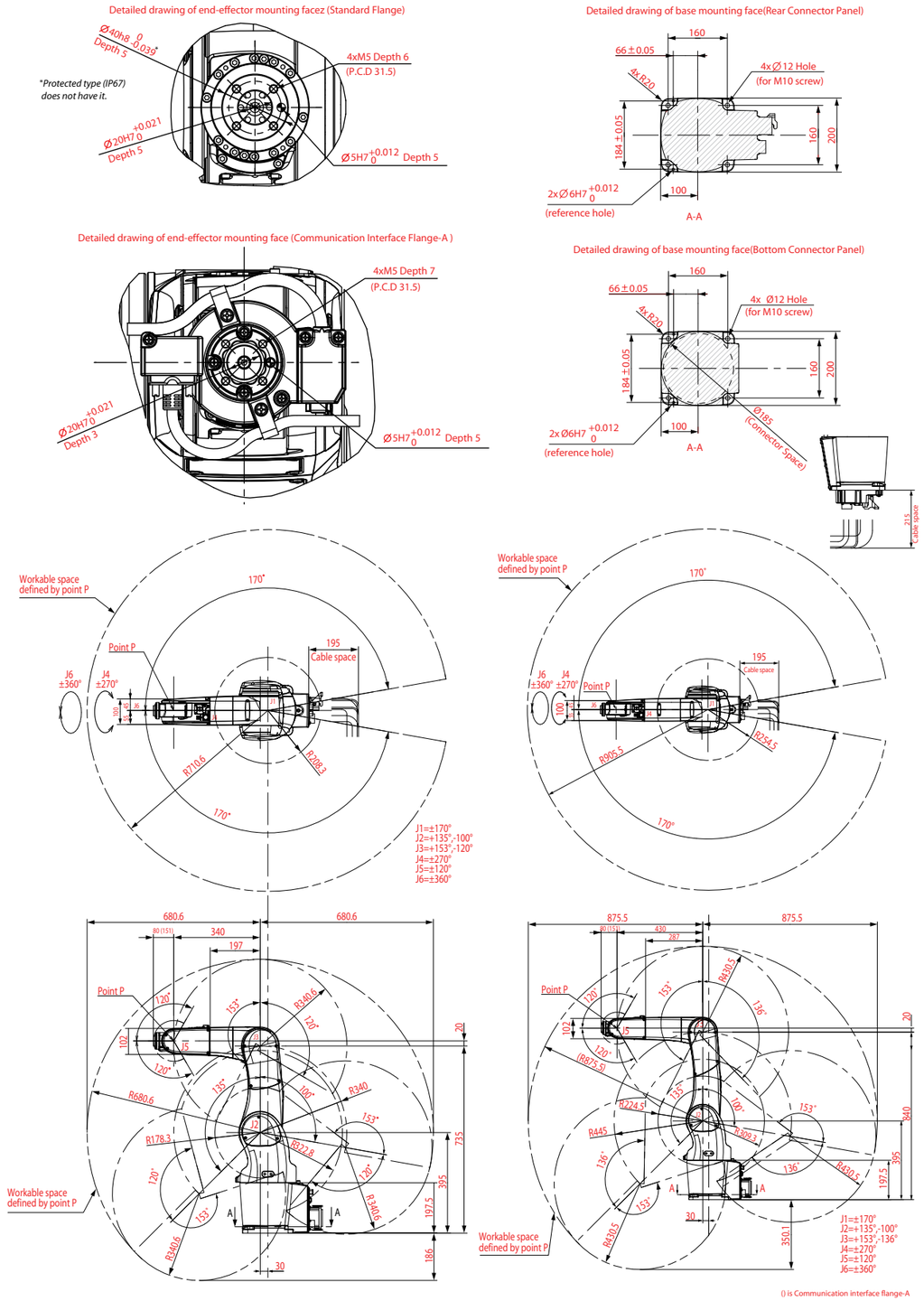

Unit: mm

KEY FEATURES

VS SERIES

The DENSO 6-axis VS Series of robots offers the same flawless build integrity and finish as the VP Series but has been designed to incorporate a longer arm reach and can manage higher payloads. It is also available in configurations that allow operation in specific environments.

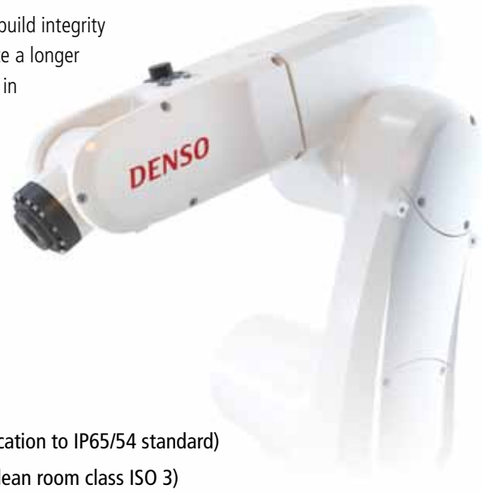

Key Features

- Exceptional precision: from ±0.02 mm
- Fastest possible cycle time: 0.49 s
- Maximum composite speed: up to 8200 mm/s
- Payloads: up to 7 kg
- Arm reach: 653 mm and 854 mm
- Mounting options: floor and ceiling
- Operation in dusty and wet environments (optional specification to IP65/54 standard)
- Operation in clean rooms (optional specification to up to clean room class ISO 3)
- ANSI and CE compliance: allows global deployment. Choose a Safety board / Safety box controller
- UL specifications (for the USA and Canada)

VS-6556G-B

Maximum motion area: 653 mm
Maximum payload: 7 kg

VS-6577G-B

Maximum motion area: 854 mm
Maximum payload: 7 kg

***Models available in:**
Optional protection degree: IP65/54 (IP65 only in J4, J5 and J6)
Optional clean room: class ISO 3 and class ISO 5
Optional: UL specifications (only for dust & splash-proof model with brakes)

		Unit	VS-6556G-B	VS-6577G-B
Number of axis			6	6
Mounting configuration			Floor, Ceiling	Floor, Ceiling
Arm configuration	Protection degree		IP40, IP65/54 (IP65 only in J4, J5 and J6)	
	Clean room		Class ISO 3, Class ISO 5	
UL specification (1)			✔	✔
Maximum motion area (Point P: Wrist center)		mm	653	854
Payload (2)		kg	7	7
Motion range	J1	deg	±170	±170
	J2		+135, -100	+135, -100
	J3		+166, -119	+169, -119
	J4		±190	±190
	J5		±120	±120
	J6		±360	±360
Maximum composite speed		mm/s	8200 (at the center of an end-effector mounting face)	7600 (at the center of an end-effector mounting face)
Cycle time		s	0.49 (with 1 kg weight)	0.59 (with 1 kg weight)
Position repeatability (3)		mm	±0.02 (4)	±0.03 (4)
Allowable inertia	J4	kgm^2	0.413	0.413
	J5		0.063	0.063
	J6		0.063	0.063
Weight		kg	Approx. 35	Approx. 36
User signal line			10 (for proximity sensor signals, etc.)	
Pneumatic pipe			Standard and Dust & Splash-proof: 7 systems (φ4x6, φ6x1), 3 solenoid valves (2-position, double solenoid), Clean: 6 systems (φ4x6), 3 solenoid valves (2-position, double solenoid)	
Brakes			Brakes for joints J2 to J6	

1. Only for Dust & Splash-proof model with brakes. 2. If the payload exceeds 6 kg, the robot unit must be used with the flange facing down at ±45 degrees from vertical. 3. Position repeatability is the value at constant ambient temperature. 4. In every direction.

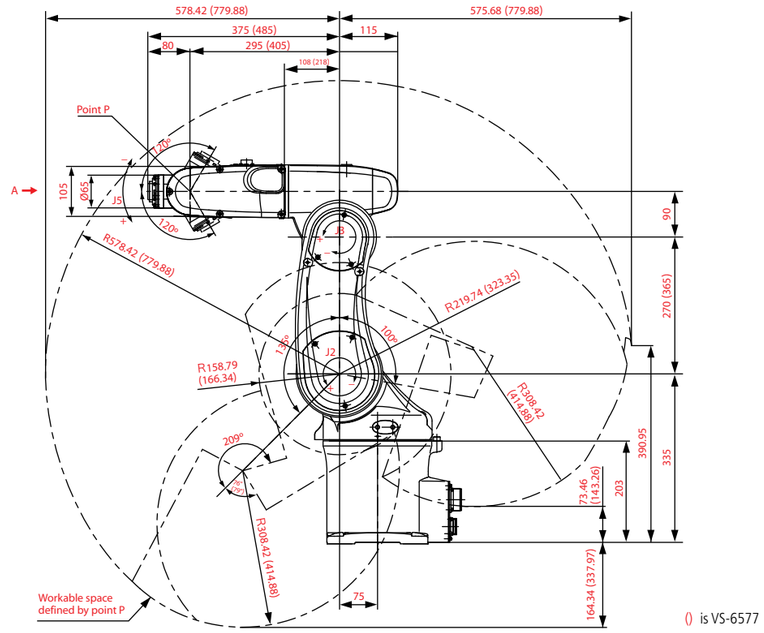

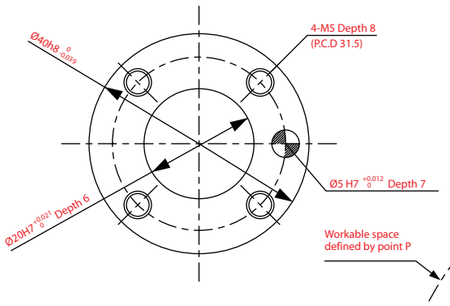

Detailed drawing of end-effector mounting face (View A)

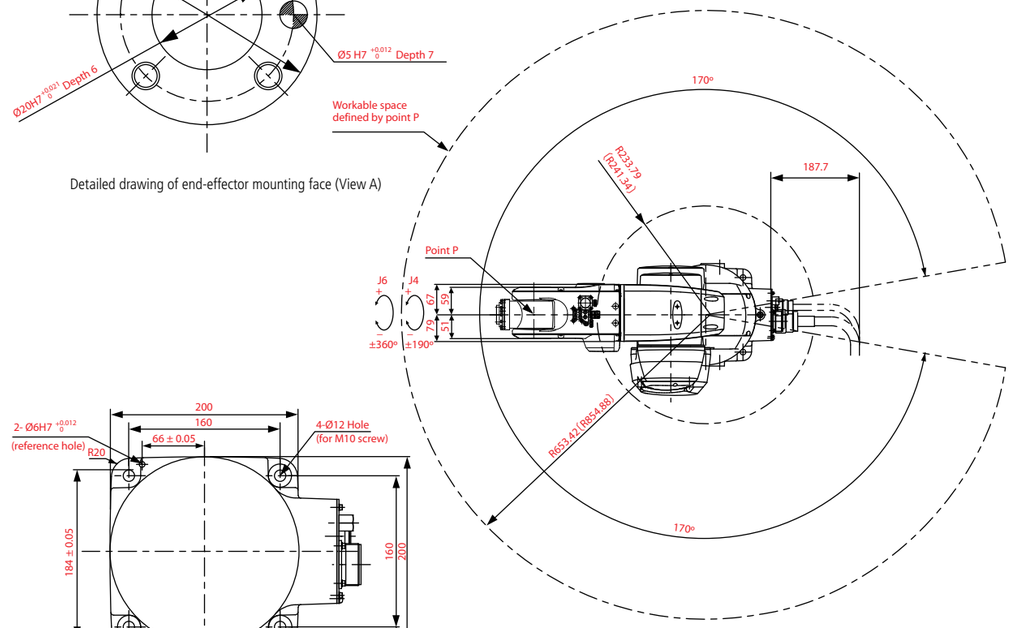

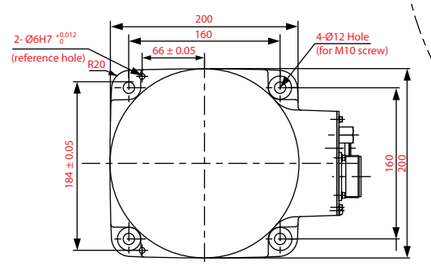

Detailed drawing of base mounting face (Top view)

Unit: mm

KEY FEATURES

VM SERIES

Of all the DENSO 6-axis robots, the VM Series offers the longest arm reach and can handle the largest payloads at high speed.

Key Features

- Exceptional precision: from ±0.05 mm
- Fastest possible cycle time: 0.89 s
- Maximum composite speed: 8300 mm/s
- Payloads: up to 13 kg
- Arm reach: 1021 mm and 1298 mm
- Mounting options: floor and ceiling
- Operation in dusty and wet environments (optional specification to IP65/54 standards)
- Operation in clean rooms (optional specification to clean room ISO 5)
- ANSI and CE compliance: allows global deployment.
  Choose a safety board / safety box controller

VM-6083G

Maximum motion area:
1021 mm
Maximum payload:
13 kg

VM-60B1G

Maximum motion area:
1298 mm
Maximum payload:
13 kg

***Models available in:**
Optional protection degree:
IP65/54 (IP65 only in J4, J5 and J6)
Optional clean room: class ISO 5

		Unit	VM-6083G	VM-60B1G
Number of axis			6	6
Mounting configuration			Floor, Ceiling	Floor, Ceiling
Arm configuration	Protection degree		IP40, IP65/54 (IP65 only in J4, J5 and J6)	
	Clean room		Class ISO 5	
UL specification			-	-
Maximum motion area (Point P: Wrist center)		mm	1021	1298
Payload		kg	13	13
Motion range	J1	deg	±170	±170
	J2		+135, -90	+135, -90
	J3		+165, -80	+168, -80
	J4		±185	±185
	J5		±120	±120
	J6		±360	±360
Maximum composite speed		mm/s	8300	8300
Cycle time		s	0.89 (with 5 kg weight)	0.95 (with 5 kg weight)
Position repeatability (1)		mm	±0.05 (2)	±0.07 (2)
Allowable inertia	J4	kgm^2	0.36	0.36
	J5		0.36	0.36
	J6		0.064	0.064
Weight		kg	Standard: 82, Dust & Splash-proof, Clean: 86	
User signal line			10 (for proximity sensor signals, etc.)	
Pneumatic pipe			Standard, Dust & Splash-proof: 7 systems (φ4x6 - φ6x1), 3 x solenoid valves (2 position, double solenoid), Clean: 6 systems (φ4x6), 3 x solenoid valves (2 position, double solenoid)	
Brakes			Brakes for joints J2 to J6	

1. Position repeatability is the value at constant ambient temperature. 2. In every direction.

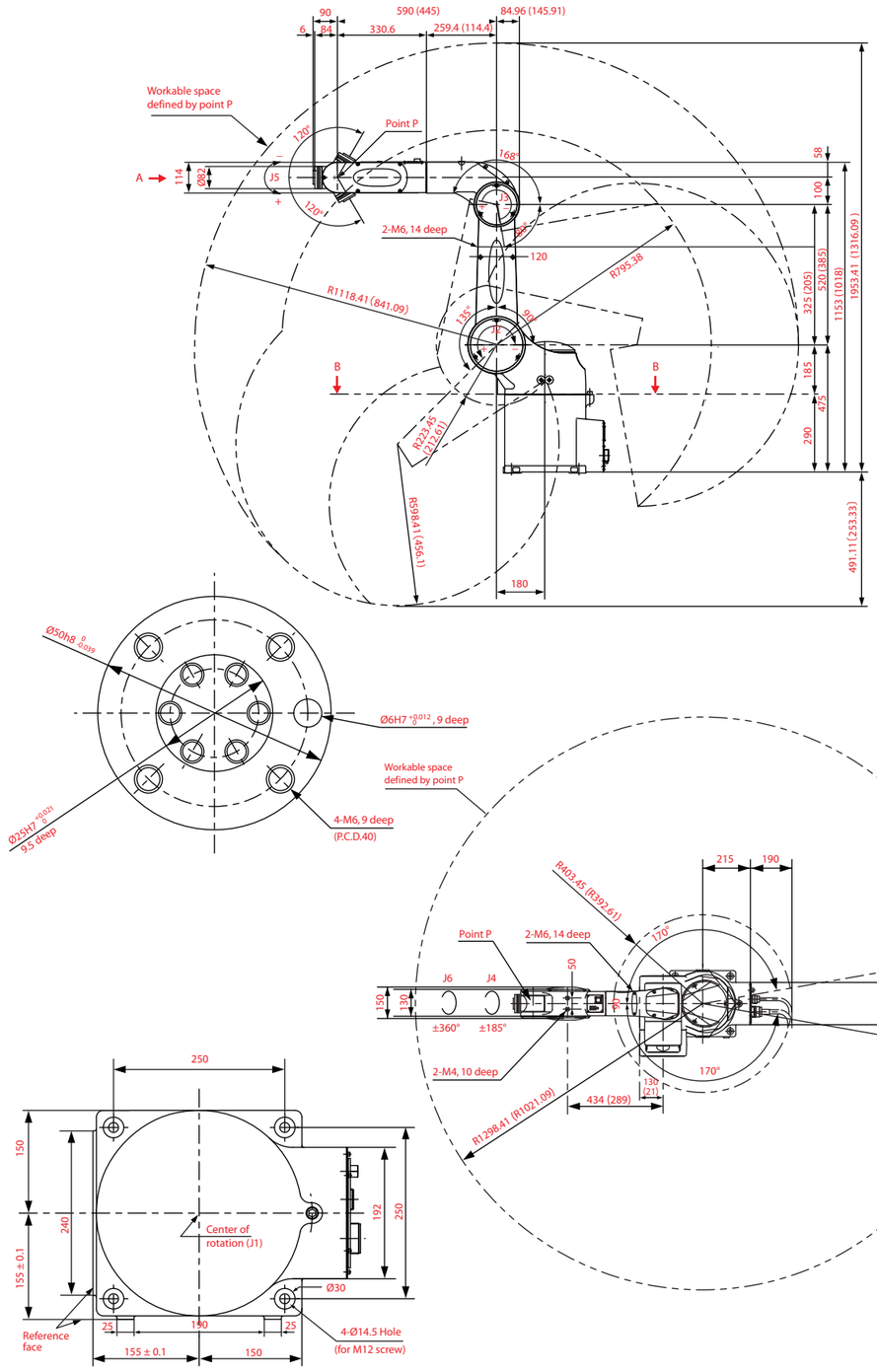

DENSO 4-AXIS ROBOTS

The DENSO range of 4-axis robots includes the HS Series and the HM Series.

Also known as SCARA (Selective Compliance Assembly Robot Arm) they are the perfect option for a wide range of purposes.

If you are looking for a high speed, exceptionally precise arm that can handle payloads up to 20 kg then DENSO SCARA robots are the ideal choice for the following:

Applications

- Pick & place
- Inspection
- Assembly
- Material removal
- Packaging
- Material handling
- Dispensing
- Bespoke applications

Main Features

- Fastest possible cycle time: 0.29 s
- Repeatability from ±0.015 mm
- Maximum composite speed up to 11 500 mm/s
- Arm lengths up to 1000 mm
- Payloads up to 20 kg
- All models include internal wiring and air piping for maximum efficiency in restricted spaces

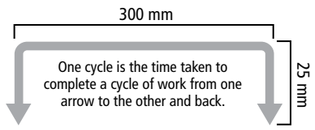

Because of their extremely compact dimensions, light weight and flexibility to be mounted on both floor and ceiling, DENSO SCARA robots are perfectly suited for environments where space is at a premium.

The circular work envelope of the robots is controlled by movement through 4-axis and, while rigid, the units have increased horizontal flexibility, enhancing the scope of their effectiveness.

To allow operation in virtually any industrial condition, DENSO 4-axis robots are available in the following protection classes:

Options

- Standard
- Dust & splash proof (IP65)
- Clean room class ISO 3 (only HS Series)
- UL specifications (for the USA and Canada)
- HS Series available with belows for the 3rd axis

KEY FEATURES

HS SERIES

The DENSO HS Series of robots is ideal for circumstances where size constraints are a key consideration.

Key Features

- Exceptional precision: from ±0.015 mm
- Fastest possible cycle time: 0.35 s
- Maximum composite speed: up to 7200 mm/s
- Payloads: up to 5 kg
- Arm reach: 350 mm, 450 mm and 550 mm
- Mounting options: floor and ceiling
- Operation in dusty and wet environments (optional specification to IP65 standard)
- Operation in clean rooms (optional specification to clean room class ISO 3)
- ANSI and CE compliance: allows global deployment. Choose a safety board / safety box controller
- UL specifications (for the USA and Canada)

***Models available in:**
Optional protection degree: IP65
Optional clean room: class ISO 3 (only for floor-mounted)
Optional: UL specifications (only for floor-mounted)
Z-axis stroke: different lengths (150 mm, 200 mm and 320 mm)

HS-4535*G

Maximum motion area: 350 mm
Maximum payload: 5 kg

HS-4545*G

Maximum motion area: 450 mm
Maximum payload: 5 kg

HS-4555*G

Maximum motion area: 550 mm
Maximum payload: 5 kg

		Unit	HS-4535*G	HS-4545*G	HS-4555*G
Number of axis			4	4	4
Mounting configuration			Floor	Floor, Ceiling	Floor, Ceiling
Arm configuration	Protection degree		IP40, IP65		
	Clean room (1)		Class ISO 3		
UL specification (1)			✔	✔	✔
Maximum arm reach		mm	350	450	550
Payload		kg	5	5	5
Motion range	J1	deg	±155	±155 (Ceiling ±152)	±155
	J2		±145	±145 (Ceiling ±141)	±145
	Z	mm	200, 320	150, 200, 320 (3)	150, 200, 320 (3)
	T	deg	±360	±360	±360
Maximum composite speed	At the center of the hand mounting flange	mm/s	7200	6300	7100
	Z		2000	2000	2000
	T	deg/s	2400	2400	2400
Cycle time		s	0.35 (with 2 kg weight)	0.35 (with 2 kg weight)	0.35 (with 2 kg weight)
Position repeatability (2)	J1+J2	mm	±0.015	±0.02	±0.02
	Z	mm	±0.01	±0.01	±0.01
	T	deg	±0.05	±0.05	±0.05
Allowable inertia		kgm^2	0.1 (with 5 kg)	0.1 (with 5 kg)	0.1 (with 5 kg)
Weight		kg	25	25	25
User signal line			19 (for proximity sensor signals, etc.)		
Pneumatic pipe			4 systems (φ4x2, φ6x2)		
Brakes			Brakes for Z axis (3rd axis) and T axis (4th axis)		

1. Only for floor-mounted. 2. Position repeatability is the value at constant ambient temperature. 3. Z-axis stroke 150 mm is available only for HSS (Ceiling-mounted). For details, please contact our sales.

S (mm)	Type	L1	L2	L3
*=2:200	Standard	697	246	46
	Dust- & splash-proof	790	206	6
	Clean room	798		
*=3:320	Standard	817	246	-74*1
	Dust- & splash-proof	910	206	-114*1
	Clean room	918		

*1 If the Z-axis stroke is 320 mm, the Z axis in the lowermost position may reach below the base mounting face.

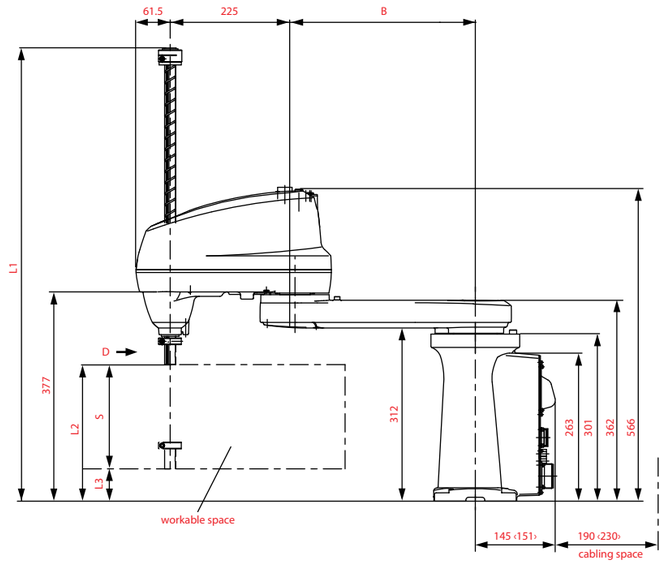

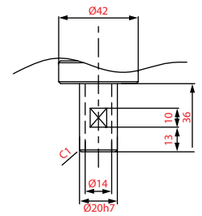

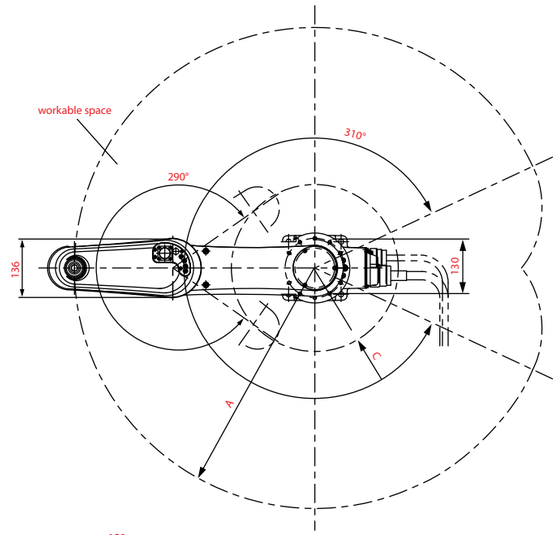

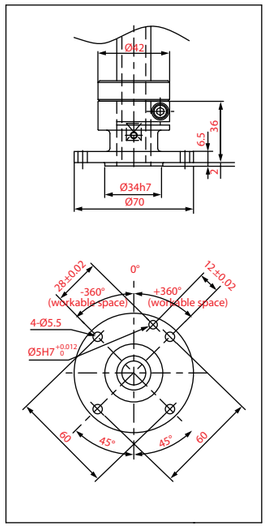

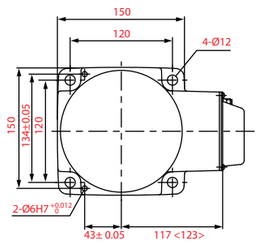

Unit: mm

Model	A	B	C
HS-4535*G	350	125	143
HS-4545*G	450	225	136
HS-4555*G	550	325	191

KEY FEATURES

HM SERIES

The DENSO HM Series of robots offers a higher payload and higher speed than the HS model range and also features a longer arm reach.

Key Features

- Exceptional precision: from ±0.02 mm
- Fastest possible cycle time: 0.29 s
- Maximum composite speed: up to 11 500 mm/s
- Payloads: up to 20 kg
- Arm reach: 600 mm, 700 mm, 850 mm and 1000 mm
- Mounting options: floor and ceiling
- Operation in dusty and wet environments (optional specification to IP65 standard)
- ANSI and CE compliance: allows global deployment. Choose a safety board / safety box controller
- UL specifications (for the USA and Canada)

***Models available in:**
Optional protection degree: IP65
Optional: UL specifications (only for floor-mounted)
Z-axis stroke: different lengths (100 mm, 200 mm, 300 mm and 400 mm)

HM-4A60*G

Maximum motion area: 600 mm
Maximum payload: 10 kg /20 kg

HM-4A70*G

Maximum motion area: 700 mm
Maximum payload: 10 kg /20 kg

HM-4A85*G

Maximum motion area: 850 mm
Maximum payload: 10 kg /20 kg

HM-4AA0*G

Maximum motion area: 1000 mm
Maximum payload: 10 kg /20 kg

		Unit	HM-4060*G	HM-4A60*G	HM-4070*G	HM-4A70*G	HM-4085*G	HM-4A85*G	HM-40A0*G	HM-4AA0*G
Number of axis			4	4	4	4	4	4	4	4
Mounting configuration			Floor	Floor	Floor, Ceiling	Floor, Ceiling	Floor, Ceiling	Floor, Ceiling	Floor	Floor
Arm configuration	Protection degree		IP40, IP65							
	Clean room		-	-	-	-	-	-	-	-
UL specification (1)			✔	✔	✔	✔	✔	✔	✔	✔
Maximum arm reach		mm	600	600	700	700	850	850	1000	1000
Payload		kg	10	20	10	20	10	20	10	20
Motion range	J1	deg	±165	±165	±165	±165	±165	±165	±165	±165
	J2	deg	±143 (Dust & Splash-proof type ±140)		±147 (Ceiling ±145, Dust & Splash-proof type ±146, Ceiling Dust & Splash-proof type ±142)		±147 (Ceiling ±142)		±147	
	Z	mm	100, 150, 200, 300 (3)	100, 150, 200, 300 (3)	100, 150, 200, 300 (3)	100, 150, 200, 300 (3)	100, 150, 200, 300 (3)	100, 150, 200, 300 (3)	100, 150, 200, 300 (3)	100, 150, 200, 300 (3)
	T	deg	±360	±360	±360	±360	±360	±360	±360	±360
Maximum composite speed	At the center of the hand mounting flange	mm/s	8780	8780	9570	9570	11 450	11 450	11 390	11 390
	Z	mm/s	2760	2760	2760	2760	2760	2760	2760	2760
	T	deg/s	2220	1540	2220	1540	2220	1540	2220	1540
Cycle time		s	0.29 (with 2 kg weight)	0.29 (with 2 kg weight)	0.29 (with 2 kg weight)	0.29 (with 2 kg weight)	0.31(with 2 kg weight)	0.31(with 2 kg weight)	0.31(with 2 kg weight)	0.31(with 2 kg weight)
Position repeatability (2)	J1+J2	mm	±0.02	±0.02	±0.02	±0.02	±0.025	±0.025	±0.025	±0.025
	Z	mm	±0.01	±0.01	±0.01	±0.01	±0.01	±0.01	±0.01	±0.01
	T	deg	±0.05	±0.05	±0.05	±0.05	±0.05	±0.05	±0.05	±0.05
Allowable inertia		kgm^2	0.25 (with 10 kg)	0.45 (with 20 kg)	0.25 (with 10 kg)	0.45 (with 20 kg)	0.25 (with 10 kg)	0.45 (with 20 kg)	0.25 (with 10 kg)	0.45 (with 20 kg)
Weight		kg	Standard: 53, Ceiling: 54, Dust & Splash-proof: 56							
User signal line			24 (for proximity sensor signals, etc.)							
Pneumatic pipe			4 systems (φ6)							
Brakes			Brake for Z axis (3rd axis)							

1. Only for floor-mounted. 2. Position repeatability is the value at constant ambient temperature. 3. Z-axis stroke 100 mm and 150 mm are available only for HM (floor-mounted). For details, please contact our sales.

Type	A	B	C	D	F
HM-4060*G, HM-4A60*G	600	250	350	213	286°
HM-4070*G, HM-4A70*G	700	350	350	199	294°
HM-4085*G, HM-4A85*G	850	350	500	281	294°
HM-40A0*G, HM-4AA0*G	1000	500	500	284	294°

Note 1: Values denote dimensions for the 10 kg payload type (HM-40**G), and values enclosed in () denote dimensions for the 20 kg payload type (HM-4A**G).

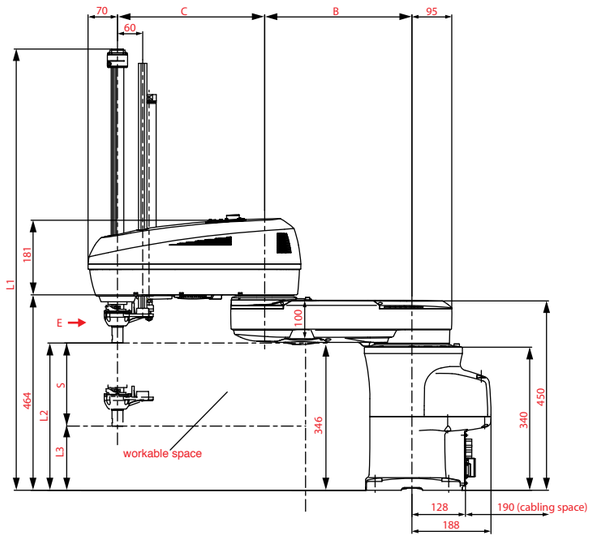

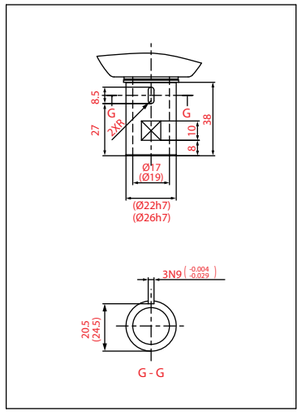

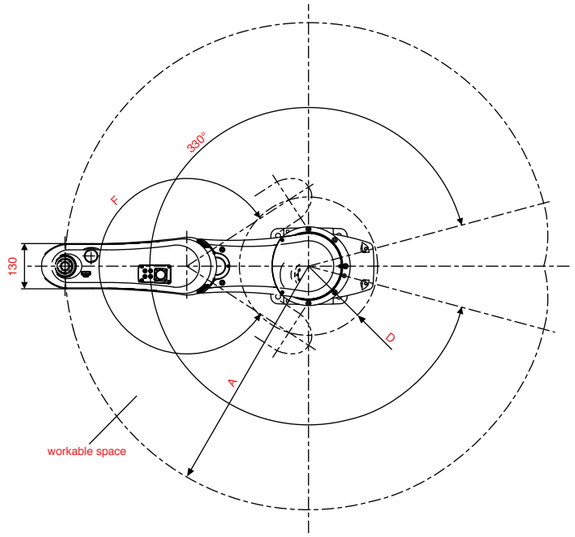

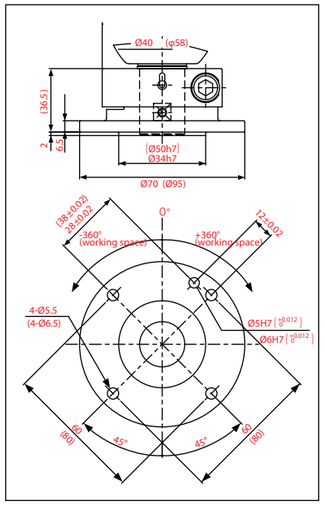

Unit: mm

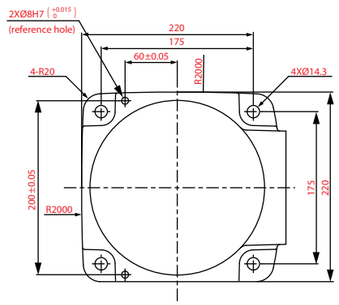

S (z axis stroke)	L1		L2	L3
	10 kg	20 kg		
100	755	749	350	250
150	805	799	350	200
200	855	849	350	150
300	955	949	350	50
400 (Note 2)	1055	1049	350	-50

Note 2: In the case of the Z axis 400 mm stroke type, the lowermost end of the Z axis may reach a lower position than the base mounting face.

KEY FEATURES

XR SERIES

The DENSO XR Series of robots can be mounted on the ceiling.

Key Features

- Operation in restricted spaces
- Faster than cartesian robots with combined movement of coordinated slide (X-axis) and swivel motions (R-axis)
- Easily fits into low-height restrictions
- Compatible with narrow frontage facility with its compact size
- Combined compactness and wide range motion area by original "X-R" structure

			XR-4341*G	XR-4371*G	XR-4372*G	XR-4373*G	XR-43A1*G	XR-43A2*G	XR-43A3*G
Number of axis		Unit	4	4	4	4	4	4	4
Mounting configuration			Ceiling	Ceiling	Ceiling	Ceiling	Ceiling	Ceiling	Ceiling
Arm configuration	Protection degree								
	Clean room		-	-	-	-	-	-	-
UL specification			-	-	-	-	-	-	-
Maximum motion area (Point P: Wrist center)		mm	850	1160	1260	1360	1460	1560	1660
Payload		kg	5	5	5	5	5	5	5
Motion range	X-axis	mm	450	760	760	760	1060	1060	1060
	R-axis	deg	±168	±168	±168	±168	±168	±168	±168
	Z-axis	mm	*=1: 135, *=2: 200						
	T-axis	deg	±360	±360	±360	±360	±360	±360	±360
Maximum composite speed	X + R-axis	mm/s	3650	3600	3600	3600	3240	3240	3240
	Z-axis / T-axis	mm/s, deg/s	Z: 1500, T: 720						
Position repeatability (1)	X + R-axis	mm	±0.015	±0.015	±0.015	±0.015	±0.015	±0.015	±0.015
	Z-axis	mm	±0.010	±0.010	±0.010	±0.010	±0.010	±0.010	±0.010
	T-axis	deg	±0.005	±0.005	±0.005	±0.005	±0.005	±0.005	±0.005
Allowable inertia		kgm^2	0.05						
Weight (2)		kg	33	45	46	47	51	52	53
User signal line			10 (for proximity sensor signals, etc.)						
Pneumatic pipe			1 system (φ8) (with optional manifold valve: 4 systems (φ4x8))						
Brakes			Brake for Z-axis						

1. Position repeatability is the value at constant ambient temperature. 2. In the case of the heaviest model (Z=200 mm).

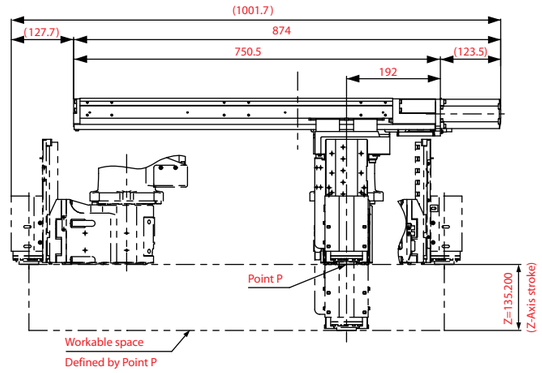

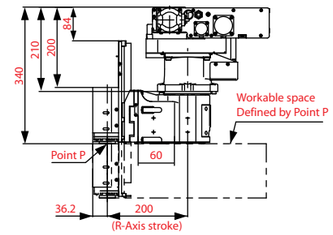

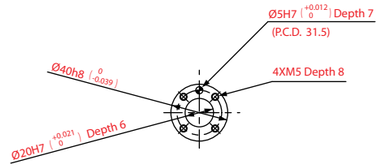

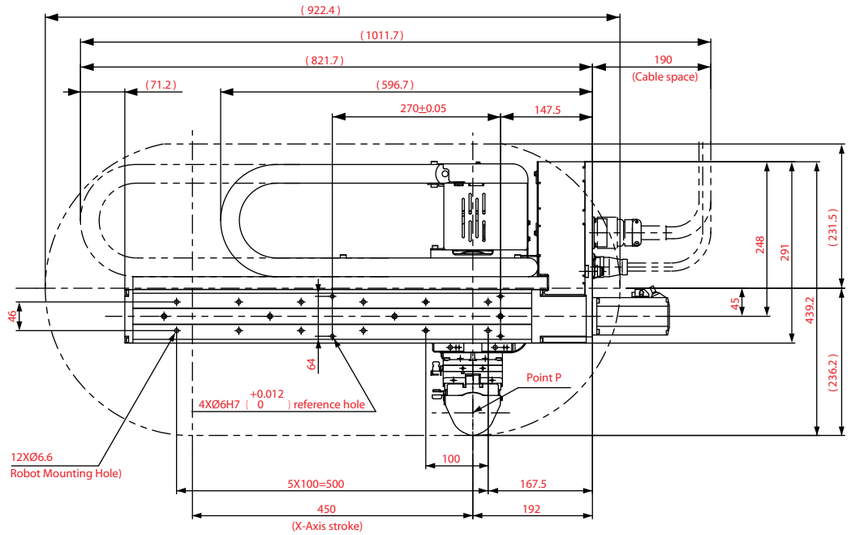

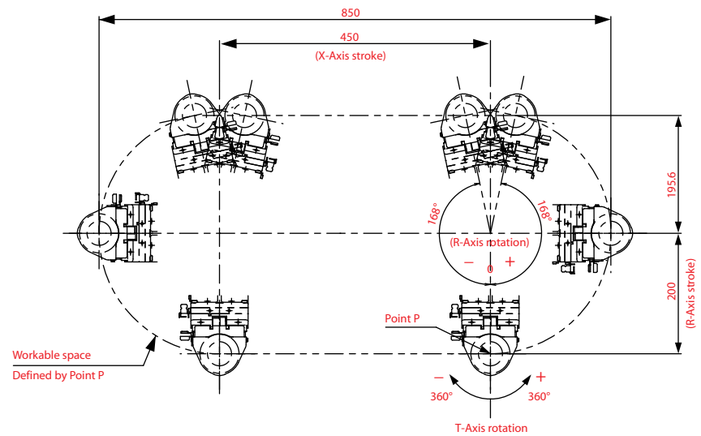

ROBOT CONTROLLERS

When you purchase a DENSO robot, included is a robot controller. DENSO robot controllers are characterized by being compact and user-friendly.

The best thing about it is that you only need one robot controller type for all robot models. In other words, if you have a 4- or 6-axis robot, the controller is practically the same. Owing to its modular design, maintenance and adjustment activities can be done easily and quickly.

The New RC8

The RC8 is the optional new robot controller for 4- and 6-axis DENSO robots. This is the world's smallest robot controller in its class compared to the RC7 (size of an A3 paper sheet). Its size makes it ideal for space-reduced production facilities that require compact equipment. The new RC8 is compact, extendible, user-friendly and compatible with the accessories of the RC7. This avoids you incurring unnecessary costs for additional or special equipment.

DENSO robot controllers are characterized by being compact and user-friendly

DENSO

Compact

The world's smallest robot controller. Ideal for space-reduced production facilities

- Small footprint: the size of an A3 paper sheet
- 60% size reduction compared to the current RC7
- Compact body: small enough to be stored easily in a small facility

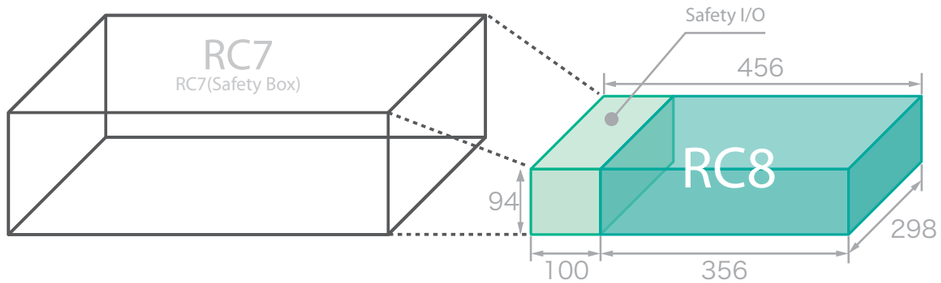

Extendible

With the new RC8 it is possible to connect to multiple devices and applications since it is already equipped with the Open Network (ORiN).

- Possible to connect to multiple devices and applications
- Equipped with the Open Network (ORiN) which enables connection to a wide variety of devices/applications

User-Friendly

Improved GUI (Graphical User Interface) takes usability a step further

- Teaching pendant equipped with the Arm 3D View
- Possible to check the robot motion on the display
- Very similar menu hierarchy and screen elements as in the RC7

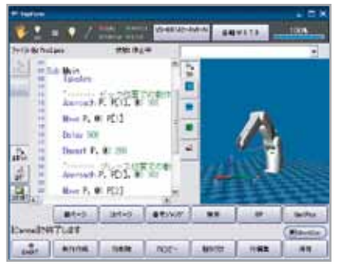

Variables window

I/O window

Arm 3D view

Program window

Compatible

No need to incur unnecessary additional costs

- Ensures compatibility with accessories of RC7 (e.g. teaching pendant, mini-pendant, I/O cables, etc.)

TÜVRheinland®
Precisely Right.

RC8 Safety I/O is under application for TUV Rheinland

The DENSO Controller is easy to use, extremely light, adaptable and highly intuitive. Key features of the DENSO Controller include:

- Compact dimensions: 440 mm x 425 mm x 152 mm
- Very light weight: less than 20 kg
- Extensive variety of connection interfaces:
  - 1 x Ethernet
  - 1 x RS232C
  - 2 x USB
  - Mini I/O
  - Safety IO
  - Hand IO
- Supplementary interface options include:
  - 2 x RS232C
  - Profibus
  - DeviceNet
  - Parallel I/O extension
  - Ethernet/IP
- Large memory capacity: 3.25 MB (10 000 steps and 30 000 points)
- Memory can be expanded by an additional 2.25 MB
- Utilises DENSO's proprietary WINCAPS III software for off-line programming, simulation and management of variables, I/Os and log-files

Safety category 3

Safety category 4

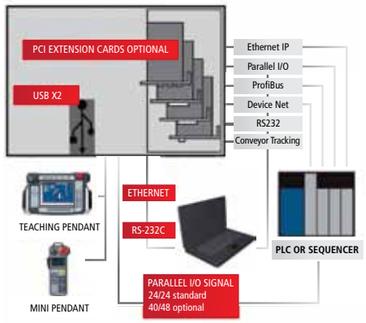

Controller model	RC7M
Size & weight	440 x 425 x 152 mm - VP, VS, VM 18 kg / HS, HM, XR 17 kg
Control method / drive system	PTP, CP 3D linear, 3D circular / All axes: Full-digital AC Servo
User memory capacity	3.25 MB (10 000 steps and 30 000 points) - exp. with 2.25 MB
Language used	DENSO robot language (confirming to SLIM)
No. of teaching programs	255
External signals (I/O)	Mini I/O Input: 8 user open points + 11 fixed system points Output: 8 user open points + 14 fixed system points (Note: The global type of the controller standard cannot use system-fixed emergency stop I/Os)
	Hand I/O Input: 8 user open points Output: 8 fixed system points
	Extension I/O board (option): 40 / 48 (2 boards possible)
External communication	1x Ethernet (100 Base-T)
	3x RS232C (2x option)
	2x USB (for backup storage on memory stick)
Field buses (option)	Profi bus slave board: 256/256 Ethernet IP
	DeviceNet Slave 256/256
	DeviceNet Master 1024/1024
	DeviceNet Master & Slave 1280/1280
Safety category	With safety board: compliant with safety category 3
	With safety box: compliant with safety category 4
Protection class	IP20 (protection box IP53 available)
Power source	VP, VS, New VS, HS, HM: Single-phase, 230 V±10 %, 50/60 Hz
	VM: 3-phase, 200 V-15 % to 230 V+10 %, 50/60 Hz

Global Type: Mini I/O Input: 8 user open points + 14 fixed system points Output: 7 user open points + 13 fixed system points

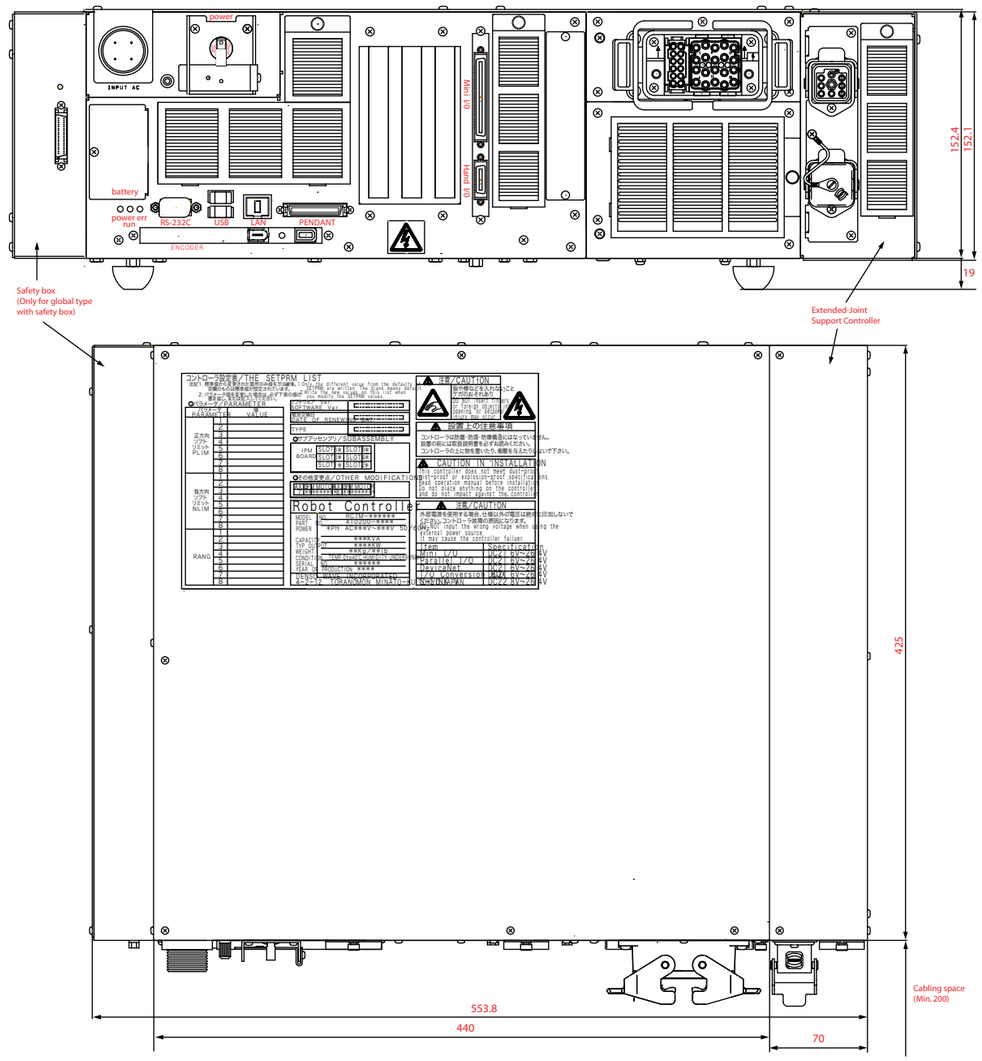

Protection box

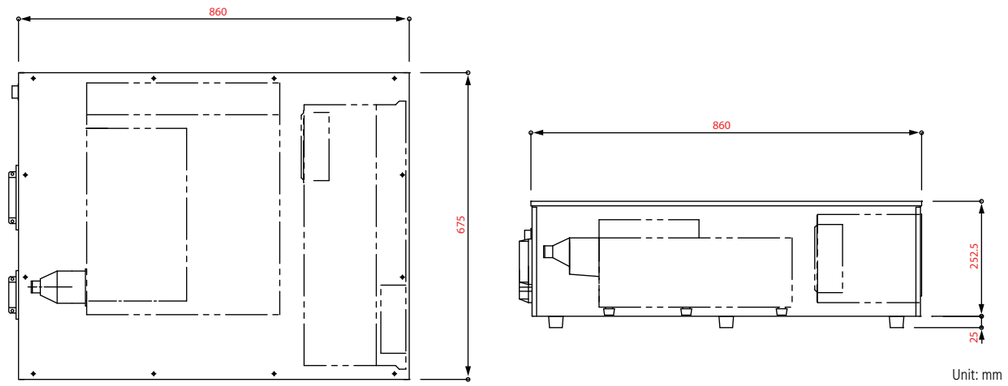

Unit: mm

ACCESSORIES

AN OVERVIEW

All DENSO robots come with a robot controller inclusive. However, there are many other accessories that allow you to increase the functionality of your robots. We have a wide range of products such as:

Teaching and mini pendants

The colour touch-screen teaching pendant from DENSO is an excellent tool for programming our robots via our user-friendly programming language and its Graphical User Interface (GUI). The teaching pendant's light weight and small and compact design make it very comfortable and easy to use.

For those users who do not require the entire functionality of the teaching pendant such as creating and editing programs but rather need some simpler functions such as operating and teaching the robot, it is possible to do this by using a DENSO mini pendant.

Motor and encoder cables, I/Os, field busses and communication boards and many others

There is a wide range of accessories for DENSO robots that allows you to integrate your robotics equipment into a full automatized system and take the best of your investment.

- Motor and encoder cables (available in different lengths and options)
- I/O connector with cables and connectors
- Field busses and communication boards for extended communication to other devices such as PLCs, HMIs, etc. (DeviceNet, Profibus, RS232C extension board, Parallel I/O extension board, license for Ethernet/IP, etc.)
- Extensional functions such as high-sensitive position & posture detection function, among others
- Memory extension
- Controller protective box for demanding work environments (IP54)
- Auto Hand Changer (AHC) for 4- and 6-axis robots
- Provider for up to 4-axis for programming YAMAHA robots via ORiN
- Diverse software for performing programming, simulation, vision and more
- Conveyor tracking and accessories
- Extra axis for RC7 controller (up to 2 additional axis) and accessories

Special accessories for the new VS Series

The following accessories have been designed for improving the functionality and performance of the new 6-axis robots of the VS Series.

- Motor and encoder cable in different lengths (high strength and dust and splash proof)
- Brake release unit
- External battery extension unit
- Air purge kit (for protected class IP67 robots)

DENSO TEACHING & MINI PENDANTS

POWER AT YOUR FINGERTIPS

The DENSO teaching and mini pendants include the following user-friendly features:

Key Features

- Touch screen display
- Very light
- Small and compact
- Easy to use
- Safe and secure
- 5 languages available: Japanese, English, German, Korean, Chinese

Item		Teaching pendant	Mini-pendant
Functions	Programming	✓	✓ (1)
	Operating the robot and teaching	✓	✓
	Maintaining	✓	✓ (2)
Display		Liquid crystal display with backlight 640 × 480 pixels	Liquid crystal display 128 × 64 pixels
Power source		DC24V (supplied from robot controller)	
Outside dimensions		198 x 290 x 104 mm	242 x 102 x 75 mm
Degree of protection		IP65	
Weight		1.3 kg or less	Approx. 0.3 kg (excluding cables)
Cable length		4 m, 8 m, 12 m (3)	

1. Mini-pendant is not able to create and edit programs. WINCAPS III Light included with mini-pendant is available to do that.
2. Mini-pendant is able to use the following maintenance functions.
   - (1) Performing CALSET
   - (2) Resetting the motor encoder data
   - (3) Setting the calendar clock built in the robot controller (Date setting)
   - (4) Setting the next battery replacement
   - (5) Releasing and locking brakes
3. Extension cable for teaching pendant available (4 m and 8 m).

MOTOR & ENCODER CABLES, I/Os, FIELD BUSSES & COMMUNICATION BOARDS

There is a wide range of accessories for DENSO robots that allows you to integrate your robotics equipment into a full automatized system and make the best of your investment.

Motor and encoder cables (standard cable – high strength):

- Available in different lengths: 1 m, 2 m, 4 m, 6 m, 12 m and 20 m
- Optional: Standard cable (high strength), standard cable (high strength) with L-connector, dust and splash proof (high strength) and dust and splash proof (high strength) with L-connector

Field busses and communication boards for extended communication to other devices:

- DeviceNet master-board
- DeviceNet slave-board
- DeviceNet master-and slave-board
- Profibus slave-board (incl. license)
- License for Profibus slave-board
- RS232C extension board
- License code for RS232C extension board
- Parallel I/O extension board
- License for Ethernet/IP

Memory extension

Controller protective box for demanding work environments (IP54)

Auto Hand Changer (AHC) for 4-and 6-axis robots

- Auto hand changer unit
- Auto hand changer adapter
- Auto hand changer stand
- Auto hand changer plate (only for 6-axis)

Conveyor tracking and accessories*

- Conveyor tracking board
- Encoder for conveyor tracking (max. 2 encoders per conveyor board)
- Encoder cable (3 m, 5 m, 15 m) and power supply cable (2 m)
- DC/DC converter

I/O connector with cables and connectors:

- I/O connector set for Mini I/O, Hand I/O, Safety I/O and Parallel I/O extension board
- I/O connector with cable (8 m and 15 m) for Mini I/O, Hand I/O and Safety I/O
- Standard I/O cable connector with cable set (8 m and 15 m)
- I/O connector with cable for Parallel I/O (8 m and 15 m)

Extensional functions:

- High-sensitivity position and posture detection function
- b-CAP slave mode
- Output specified angle
- External TCP
- EtherNet/IP adapter
- Non-stop motion calculator

Provider for up to 4-axis for programming YAMAHA robots via ORiN

Diverse software for performing programming, simulation, vision and more (for more information please refer to the software section)

Extra axis for RC7 controller (up to 2 additional axis) and accessories:

- Extra axis controller
- Cable set including: motor and encoder cable, and encoder backup battery (4 m, 6 m, 12 m)
  - For over 1.5 kW motor
  - For under 750 W motor
- Motors with or without break (from 50 W to 1500 W)
- Built-in IPM board set for 7th and 8th axis

***Note:** Conveyor tracking can be used in combination with our 4-and 6-axis robots

SPECIAL ACCESSORIES FOR THE NEW VS SERIES

Special accessories for the new VS Series

The following accessories have been designed for improving the functionality and performance of the new 6-axis robots of the VS Series.

Motor and encoder cable in different lengths (high strength and dust and splash proof)

- Available in different lengths: 2 m, 4 m, 6 m, 12 m and 20 m

Brake release unit (IP53)

- The wiring of this switch is directly connected to the brake release signal of each axis enabling you to release the brake of each axis easily

External battery extension unit

- This device, installed outside the robot, facilitates the replacement of batteries and improves maintainability

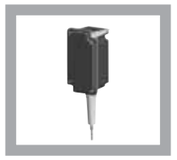

Air purge kit (for protected class IP67 robots)

- This device is intended for protected robots (IP67). It maintains a protection level by producing air pressure inside the robot

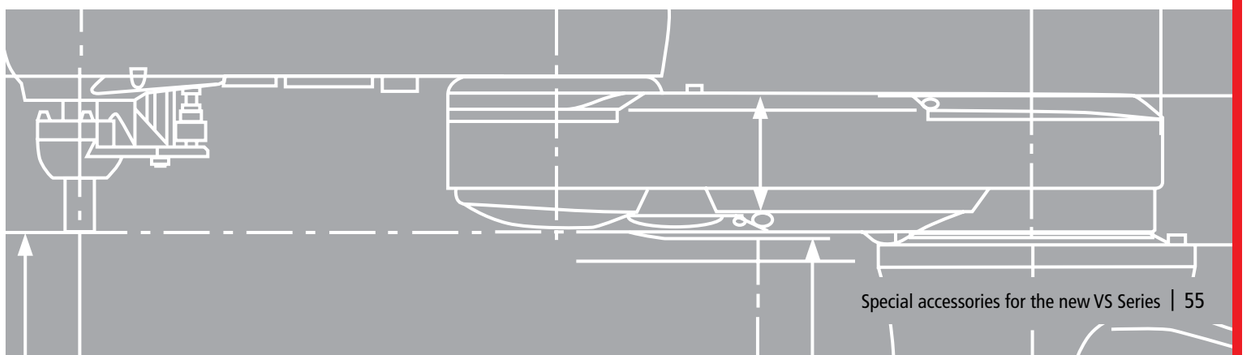

PROGRAMMING DENSO ROBOTS

CONTROL MADE SIMPLE

Programming robots can be an extremely time consuming and challenging task, which is why we have developed a suite of tools designed to make the process as quick, simple and results-orientated as possible.

PC-based options for programming DENSO robots:

WINCAPS III

DENSO's proprietary off-line programming, monitoring and simulation software. This software is a package for efficiently developing and validating DENSO robot operation programs. It permits monitoring of robot operation, variables, and I/Os from a computer connected to the robot controller. It also supports managing program files as projects, storing frequently used programs in program banks, and various other program management functions.

ORiN2

Pioneering middleware that allows the use of high-level programming languages, including C++, C#, Visual Basic and Java, etc. to program DENSO robots. To simplify the programming process, ORiN2 provides two independent interfaces for accessing devices on a network

NI LabVIEW™ software

DENSO has developed a sample program (based on ORiN2) which allow users to program their robotics applications using the graphical programming language from National Instruments™ LabVIEW™

b-CAP

Binary Controller Access Protocol is an option available within ORiN2. The protocol is based on Transmission Control Protocol / Internet Protocol (TCP/IP) and connects to DENSO robots and peripheral devices via a PC, PLC or any other appropriate device that includes an Ethernet connection. b-CAP is platform and programming language independent

HALCON extension package

DENSO has created a comprehensive, dedicated extension package to enable HALCON from MVTec and DENSO users to conveniently program and control DENSO robots and their vision applications through the same simple graphical interface (HDevelop)

WINCAPS III

Off-line programming, monitoring and simulation software

Based on DENSO's PAC programming language, WINCAPS III enables users to conveniently program, design, implement and perform maintenance on their robotic applications. The software has been created to provide a simple and intuitive system that includes extensive simulation features. These functions reduce the effort required to plan, apply and maintain core robotic exercises, saving time and expenditure.

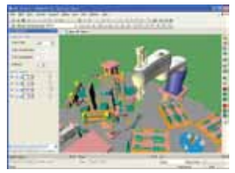

Item	Full Function Version	Light Version	Trial Version
Create new program / edit program	✓	✓	✓ (1)
Program bank	✓	✓ (2)	✓ (2)
3D CAD data import	✓	-	-
3D view teach NEW	✓	✓	✓
Simulation function NEW	✓	-	-
Debugging	✓	-	-
Monitoring	✓	✓ (3)	✓ (3)
Movie save function NEW	✓	✓	✓
Print	✓	-	-
Simple calibration NEW	✓	✓	✓

Entering a user ID upgrades the trial version to the Full Function version. **1.** 1program (PRO1) only. **2.** Number of library limited. **3.** Sampling interval: 1 sec.

Key advantages:

- Off-line programming allows robots to be programmed through a PC without the need for a physical connection to either the robot or the controller
  - Input information and change variables with ease and clarity
  - Import CAD drawings in standard VRML and DirectX formats
  - Click an object with a mouse and a robot end moves to the position immediately. Obtain the position data (teaching) easily NEW
- 3D simulation of robots and peripherals allows you to achieve the following with the minimum of effort:
  - Plan the layout of automated workcells in a virtual environment
  - Verify robot arm reach
  - Determine obstacle clearances and detect potential collisions
  - Troubleshoot and debug programs
  - Confirm process cycle times
  - Save a simulation movie NEW
- Remote monitoring
  - Examine workcell operation using 3D simulation, real time I/O status indicators and detailed control logs
- Panel designer
  - Customise the teaching pendant display to your preferences
- Simple calibration
  - Calibrate easily with simple calibration wizard NEW

b-CAP is based on Transmission Control Protocol / Internet Protocol (TCP/IP)

This control protocol enables connection to DENSO robots and peripheral devices using a PC, PLC or other device which incorporates Ethernet TCP/IP or UDP.

It works completely independently of any incumbent platform (iOS, Linux, Windows, etc.) or programming language.

With b-CAP it is possible to control the robot directly by sending a destination position in short time intervals using your own kinematic calculation in real time.

Key advantages:

- Highly flexible and powerful control through PCs, PLCs or other applicable hardware device using TCP/IP or UDP
- Platform and programming language independent
- No requirement to learn a new robotic programming language
- Real time control of robots

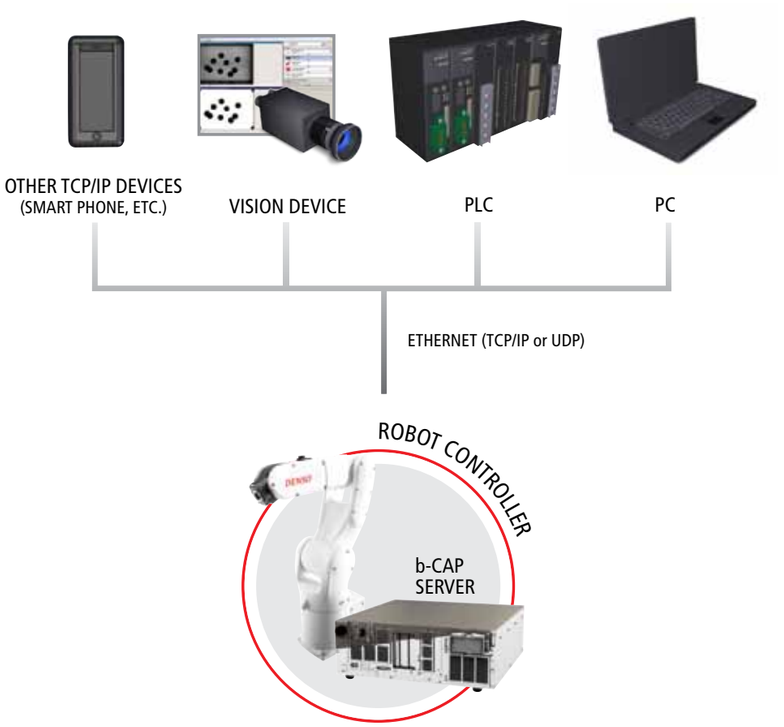

Middleware for programming DENSO robots, peripheral devices and all your factory automated processes

This pioneering software includes two separate and distinctive interfaces for accessing and controlling devices on a network. One interface is used for the development of 'Applications and Case Studies'; and the other is used for actually connecting to specific devices.

The Application Programming Interface (API) provides a common object model for all of your network devices, each of which can then be plugged into ORiN2 by creating a dedicated 'provider'.

This separation of processes simplifies and streamlines the implementation of your programming procedures.

ORiN2 also provides extensive protocols for internet connection.

- ORiN2 provides the unified access from a PC to a lot of devices such as an industrial robot and a PLC
- ORiN2 enables to easily use the distributed object technologies such as DCOM and SOAP, and it provides two standardized software interfaces, Application Interface and Device Interface
- ORiN2 SDK enables to use a lot of programming languages such as C#, C++, C and Delphi supporting OLE (COM, ActiveX)
- ORiN2 SDK provides a lot of utility tools which make it easy to create an application and a provider. Ex. Provider Wizard, CAO Tester

Package Type	ORiN2 SDK Full-set			ORiN2 SDK Runtime			ORiN2 SDK Bundle		
Item	Support	Binary	Source	Support	Binary	Source	Support	Binary	Source
CAO Engine	✓	✓		✓	✓		✓	✓	
Provider Development Tools	✓	✓							
CAO Provider (number)	✓	✓	✓	✓	✓		✓	✓	
(Ready-made Providers)	12	61	44	12	61	0	7	7	0
Test and Configuration Tools	✓	✓		✓	✓		✓	✓	
CAO-OPC	✓	✓		✓	✓				
CAO-SQL	✓	✓		✓	✓				
CAO-UpnP		✓			✓				

- **Bundle version:**
  This edition includes providers for the DENSO Controller and allows you to write program code in standard languages
- **Runtime version:**
  This edition of ORiN2 is similar to the Bundle version but includes additional interfaces for device options
- **SDK version:**
  The same as the Runtime version but with the functionality to create custom interfaces

System Requirements: OS: Windows® 2000/XP Professional/Vista | PC: CPU Pentium III 1 GHz, Memory 512 MB, HDD 500 MB

ORiN Vision

ORiN Vision is the extensive vision library designed exclusively for ORiN2 middleware.

ORiN Vision provides many functions for image capturing, image processing (like edge detection, filters, etc.), image analysis (like blob analysis, finding contours, etc.), image interpretation and also for robot and camera calibration. Because it combines ORiN2 and OpenCV the library allows you to directly program DENSO robots and vision applications with standard high-level languages including C++, C# and VB among others throw only one interface.

Key advantages:

- Built-in processing functions use the OpenCV standard
- High-level image processing fuctionality
- The system is hardware independent allowing you to connect to any off-the-shelf camera regardless of interface (analogue, USB, IEE 2394, etc.)
- Fast and efficient procedures result in short development times

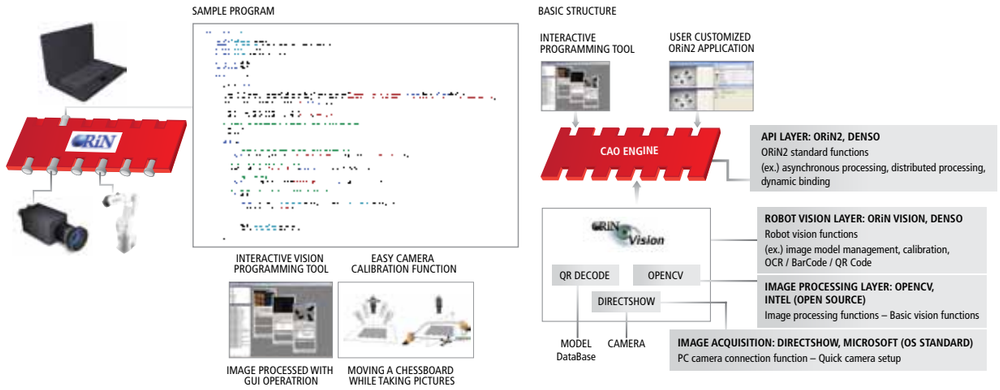

HALCON from MVTec with Extension Package for DENSO robots based on ORiN2

HALCON software provides an integrated development environment (IDE) for machine vision and has become one of the worldwide industry standards.

The HALCON Extension Package offers a complete and powerful solution with more than 1400 commands for operations including blob analysis, morphology, pattern matching, measuring, identification and 3D vision.

Because HALCON is so widely used and highly regarded, DENSO has created a comprehensive, dedicated extension package to enable HALCON and DENSO users to conveniently program DENSO robots and control their vision applications through the same simple graphical interface.

This integrated development environment, which is called HDevelop, is intended for engineers with a thorough knowledge of machine vision. With our DENSO extension package for HALCON users can program our robots easily.

Key advantages:

- DENSO robots can be programmed directly using one clear and practical interface
- The DENSO extension package is conveniently and seamlessly incorporated into the HALCON integrated development environment, HDevelop
- No previous experience of robotic programming is required

e.vision

e.vision is a configuration tool for setting up vision applications with DENSO robots and Anyfeeds from FlexFactory, which is based on ORiN Vision (an extension of the ORiN2 software package).

Using a clear and simple Graphical User Interface, e.vision allows you to directly manipulate and configure the actions of the robot and the Anyfeed from FlexFactory.

This incredibly user-friendly and easy to use system is intended for non-experienced users of computer vision.

Key advantages:

- Extremely user-friendly structure and interface
- The easy vision configuration tool for "pick and place" applications is exceptionally fast, simple and effective
- It works extensively with Anyfeeds from FlexFactory
- It is also possible to directly configure FlexFactory's Anyfeeds
- It includes two helpful Wizards that provide step-by-step guidance through core features including camera calibration and your vision applications

Robot Tools (based on ORiN2)

Robot Tools is a fully featured suite of utility tools created to enable the optimum maintenance and operation of DENSO robots. The software streamlines daily maintenance workflow and reduces the running costs of a robot after installation.

Key advantages:

- GP operator: Operate / teach a robot via PC with a mouse or a game pad NEW
- Image logger: save images and data before and after an error NEW
- Virtual TP: a PC-based virtual teaching pendant
- Mobile monitor: sends error notices via email
- Control log analyser: provides management of historical data and visualisation of servo statistics
- Easy backup: back up all data from controllers on the network with one click operation

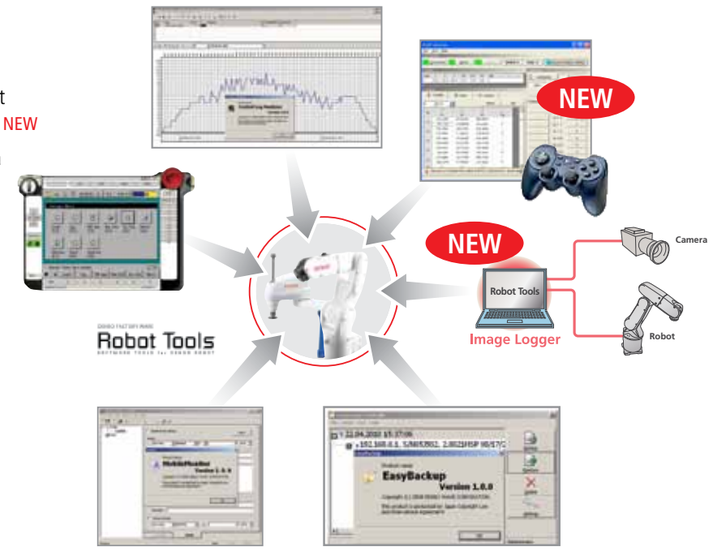

Product name	Function
GP operator NEW	Connect a robot controller with a PC and operate / teach a robot with a mouse or a game pad Monitor current robot position / variables (Type P, J and T) or images from an isolated environment (e.g. clean room) Assist an engineer to control a robot via PC.
Image Logger NEW	Help to determine causes of sudden error and wrong assembly in your production. Capture images around the error and save equipment data (I/O, variable etc.). Specify the error cause through validation of the images and the data and contribute equipment improvement.
Virtual TP	Works with a controller set on a manual mode: various settings can be made on the GUI based Virtual TP. Robot teaching can also be done with a Mini Pendant.
Control Log Analyzer	Obtains Control Log from a designated controller and analyzes the robot operating status by graphing out the Control Log: visualizes the operating status.
Easy Backup	Backups and restores all data of multiple controllers with a single click. Consolidates the compressed data: enriches the portability and maintenance performance of robot facilities.
Mobile Monitor	Monitors controllers operating status and notifies errors or troubles through portable devices to an operator even not at the site.

System Requirements: OS : Windows® 2000 SP4 or later, Windows® XP SP1 or later, Windows® Vista | PC : CPU Pentium® III 1 GHz or faster / Memory 512 MB or more / HDD 500 MB or more. ORiN2 is a registered trademark of Japan Robot Association

ROSY (ROBOT OPTIMIZATION SYSTEM)

ROSY (Robot Optimization System) calibration kit for DENSO robots

Certain robotic tasks and applications require a level of precision and accuracy of pose that can only be achieved through more advanced methods of calibration.

The ROSY (Robot Optimization System) calibration kit enables you to achieve these advanced levels of precision in a sophisticated, direct and straight forward manner.

ROSY utilises a calibration sphere and cameras to assess kinetic errors. The resulting correction values are calculated and the control parameters can then be adjusted accordingly with a minimum of effort.

Key advantages:

- The user can increase the already exceptional accuracy of DENSO robots even further for special applications
- The whole process can be accomplished easily and is usually completed in less than an hour
- Identical and accurate robot cells can be created quickly and efficiently
- On-site calibration service

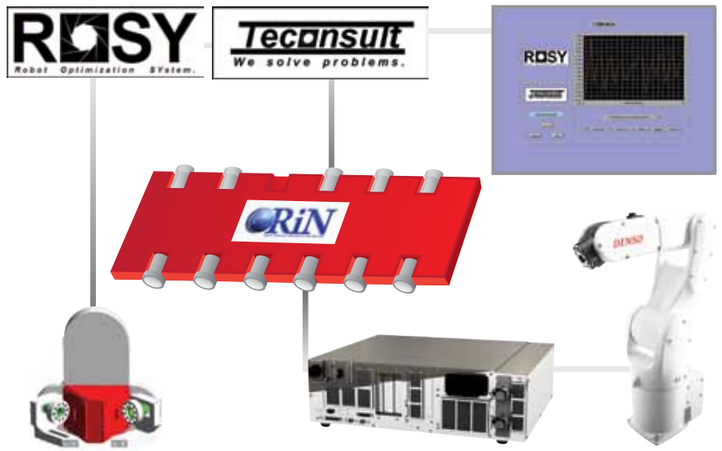

For more information please visit www.teconsult.de

3DCREATE®

3DCreate®

Implementing a professional robotic solution is a substantial and serious project which can have a major impact on the whole of your business. Whether you are investing in a single arm, or a complete automated production facility, it is vital that you are confident in the potential performance of your installation.

Visual Components® – the world's leading provider of 3D robotic and manufacturing software created 3DCreate® which is a simple, quick and cost-effective software tool that enables machine builders, system integrators and manufacturers to simulate complete factory layouts in a virtual environment.

This highly innovative and powerful solution provides all of the functions you need to create new simulated components from existing 3D CAD data, allowing you to customise, observe and evaluate your industrial robotic applications in advance.

Key advantages:

- Use ready-made robot models from online eCatalogue
- Easy plug'n'play interface for layout design
- Integrate robot cells with factory layouts
- Parametric components suit various customer cases
- Connect to an external controller

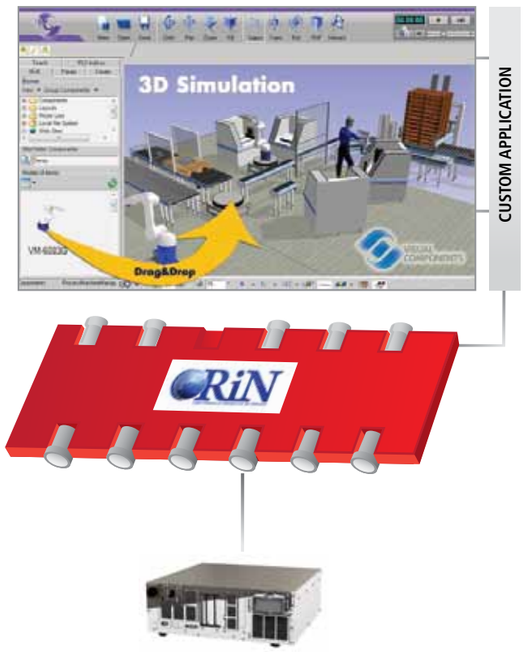

For more information please visit www.visualcomponents.com